PIONEER®
The Art of Entertainment

Service Manual

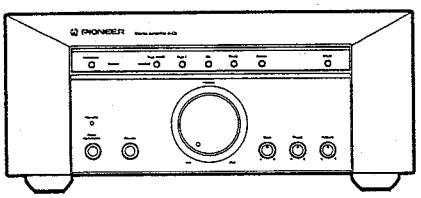

ORDER NO.
RRV1025

STEREO AMPLIFIER

A-C5
A-C3

THIS MANUAL IS APPLICABLE TO THE FOLLOWING MODEL(S) AND TYPE(S).

Type	Model		Power Requirement	The voltage can be converted by the following method.
	A—C5	A—C3		
HEWZIW	○	○	AC220—230V	AC240V, ✱
HE	○	○	AC220—230V	AC240V, ✱
HB	○	○	AC240V	AC220—230V, ✱

✱ : Alter the wiring of the Power-supply block at the primary winding of Power-transformer referring to the "Line Voltage Selection" described in Service Manual.

• **For the following: A—C5/HE and HB; A—C3/HEWZIW, HE and HB, refer to page 32.**

CONTENTS

1. EXPLODED VIEWS, PACKING AND PARTS LIST ··· 2
2. SCHEMATIC AND PCB CONNECTION DIAGRAMS··· 6
3. PCB PARTS LIST ····· 27
4. BLOCK DIAGRAM ····· 30
5. IC INFORMATION ····· 31
6. FOR A-C5/HE, HB, A-C3/HEWZIW, HE AND HB TYPES ····· 32
7. PANEL FACILITIES ····· 36
8. SPECIFICATIONS ····· 38

PIONEER ELECTRONIC CORPORATION 4-1, Meguro 1-Chome, Meguro-ku, Tokyo 153, Japan
PIONEER ELECTRONICS SERVICE INC. P.O. Box 1760, Long Beach, California 90801 U.S.A.
PIONEER ELECTRONICS OF CANADA, INC. 300 Allstate Parkway Markham, Ontario L3R 0P2 Canada
PIONEER ELECTRONIC [EUROPE] N.V. Haven 1087 Keetberglaan 1, 9120 Melsele, Belgium
PIONEER ELECTRONICS AUSTRALIA PTY. LTD. 178-184 Boundary Road, Braeside, Victoria 3195, Australia TEL: [03] 580-9911
© **PIONEER ELECTRONIC CORPORATION 1994**
T-FF JAN. 1994 Printed in Japan

1. EXPLODED VIEWS, PACKING AND PARTS LIST

NOTES:
- *Parts marked by "NSP" are generally unavailable because they are not in our Master Spare Parts List.*
- *The ⚠ mark found on some component parts indicates the importance of the safety factor of the part. Therefore, when replacing, be sure to use parts of identical designation.*
- *Parts marked by " ◉" are not always kept in stock. Their delivery time may be longer than usual or they may be unavailable.*

• PARTS LIST

Mark	No.	Description	Parts No.
⚠	1	TRANSISTOR Q3,Q4	2SA1264N
⚠	2	TRANSISTOR Q1,Q2	2SC3181N
⚠	3	TRANSISTOR Q5,Q6	2SC4137
	4	SUB PANEL(PLS)	AMB7030
⚠	5	POWER TRANSFORMER	ATS7007
	6	TERMINAL SCREW	AKE−031
⚠	7	FU1001 (I=T1.6A,V=250)	AEK−510
⚠	8	AC POWER CORD	ADG1049
	9	FLEXIBLE CABLE	ADD1128
	10	FLEXIBLE CABLE	ADD1130
NSP	11	CHASSIS	ANA7005
	12	REAR PANEL(MTL)	ANC7062
NSP	13	HEAT SINK	ANH7003
	14	INSULATOR	AMR7007
	15	INSULATOR	PNW2363
	16	KINK METAL	ANG1838
	17	PCB METAL	ANG7001
	18	SHIELD BOX	ANK7001
	19	FRONT PANEL(AL)	ANB7004
	20	CUSHON GUM	AEB7003
	21	BONNET CASE(MTL)	ANE7015
	22	SCREW	PTZ45P100FZK
	23	STRAIN RELIEF	AEC−882
	24	NYLON RIVET	AEC1160
NSP	25	PCB SPACER	AEC1371
NSP	26	PCB SUPPORT	AEC1461
	27	SHEET	AEE1014
	28	BINDER	AEP−215
NSP	29	PCB MOULD	AMR2115
	30	PCB HOLDER	AMR7008
NSP	31	CORD CLAMPER	PEC−034
	32	FRONT PANEL	AMB7045
	33	SCREW (STEEL)	ABA1006
	34	SCREW	ABA1024
	35	SCREW	ABA1082
	36	SCREW (STEEL)	ABA1095
	37	SCREW (STEEL)	ABA1184
	38	SCREW (STEEL)	ABA1192
	39	SCREW (STEEL)	ABA1193
	40	SCREW (STEEL)	ABA7002
	41	SCREW	BBZ30P080FZK
	42	SCREW	BBZ30P100FZK
	43	SCREW	BPZ26P080FMC
	44	LENS(POWER IND)	AAK2442
	45	VOLUME LING	AAK7029
	46	DISPLAY PANEL(PLS)	AAK7031
	47	NAME PLATE (AL)	RAN1013
	48	VOLUME ASSY(AL)	AAB7009
	49	BASS TRE KNOB(PLS)	AAB7011
	50	POWER BUTTON(PLS)	AAD7013
	51	FUNCTION BUTTON(PLS)	AAD7016
NSP	52	HEAD PHONE ASSY	AWZ7001
NSP	53	TRANS CONNECT ASSY	AWZ7300
	54	AF ASSY	AWZ7008
	55	SUB TRANS ASSY	AWZ7023
	56	VOLUME ASSY	AWZ7005
NSP	57	SP OUT ASSY	AWZ7019
	58	POWER AMP ASSY	AWZ7029
	59	FRONT ASSY	AWZ7031
	60	FUNCTION ASSY	AWZ7033
⚠	61	FU1003 (I=T800MA,V=250)	AEK−507
	62	OPERATING INSTRUCTIONS (German, Italian)	ARC7004
	63	REMOTE CONTROL UNIT	AXD7018
NSP	64	BATTERY(R6P,AA)	AEX−010
	65	F.PAD	AHA7012
	66	R.PAD	AHA7013
	67	PACKING CASE	AHD7009
	68	PACKING SHEET	AHG1093
	69	BATTERY COVER	AZA7027
	70	CUSHON GUM	AEB7005
	71	FAN MOTOR	AXM1019

• PACKING

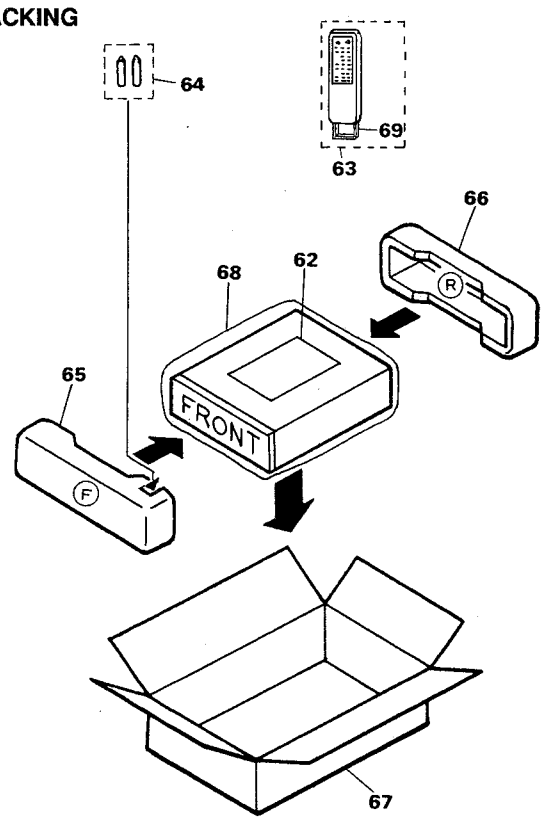

● EXTERIOR

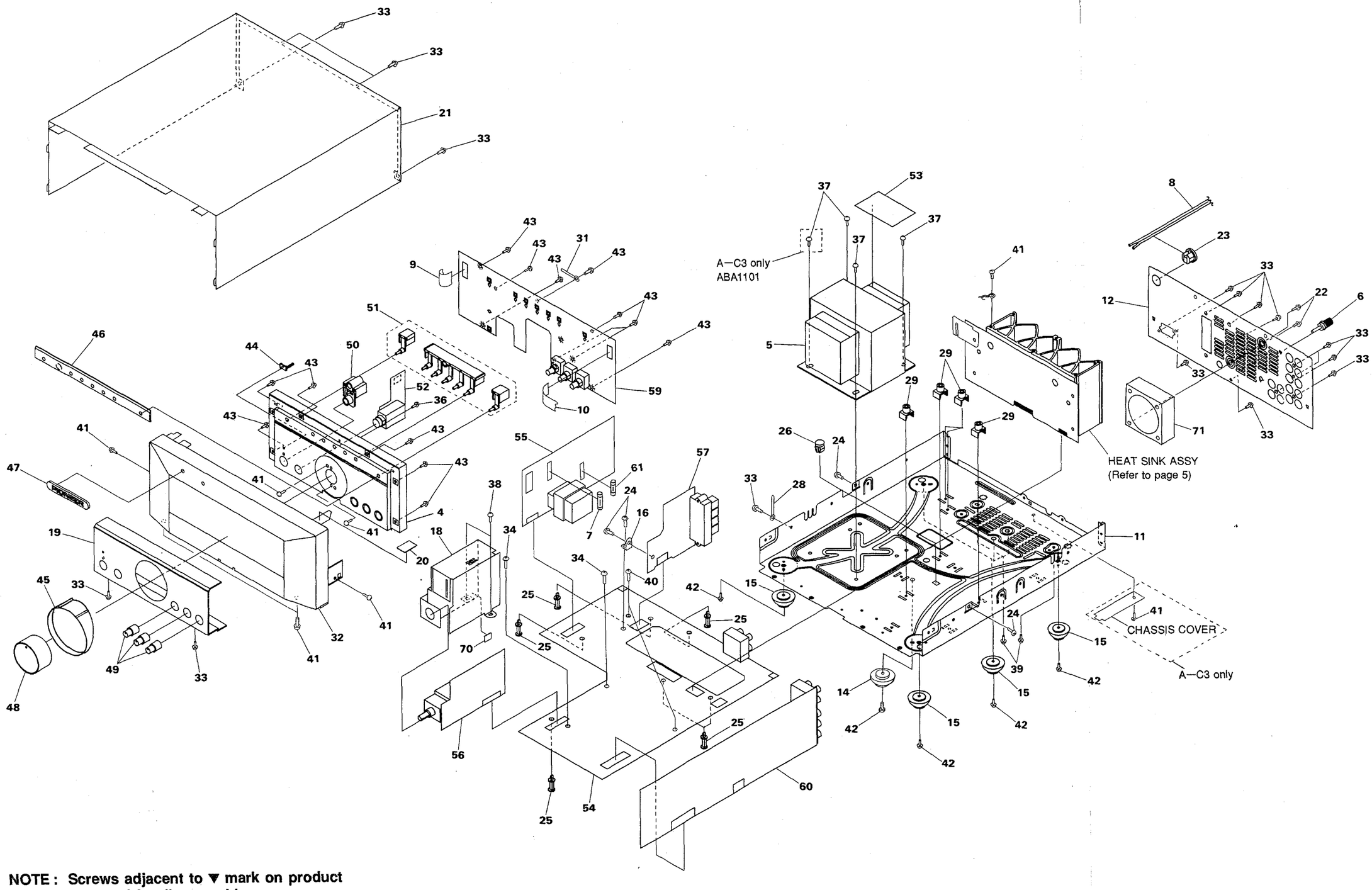

NOTE : Screws adjacent to ▼ mark on product are used for disassembly.

● HEAT SINK ASSY

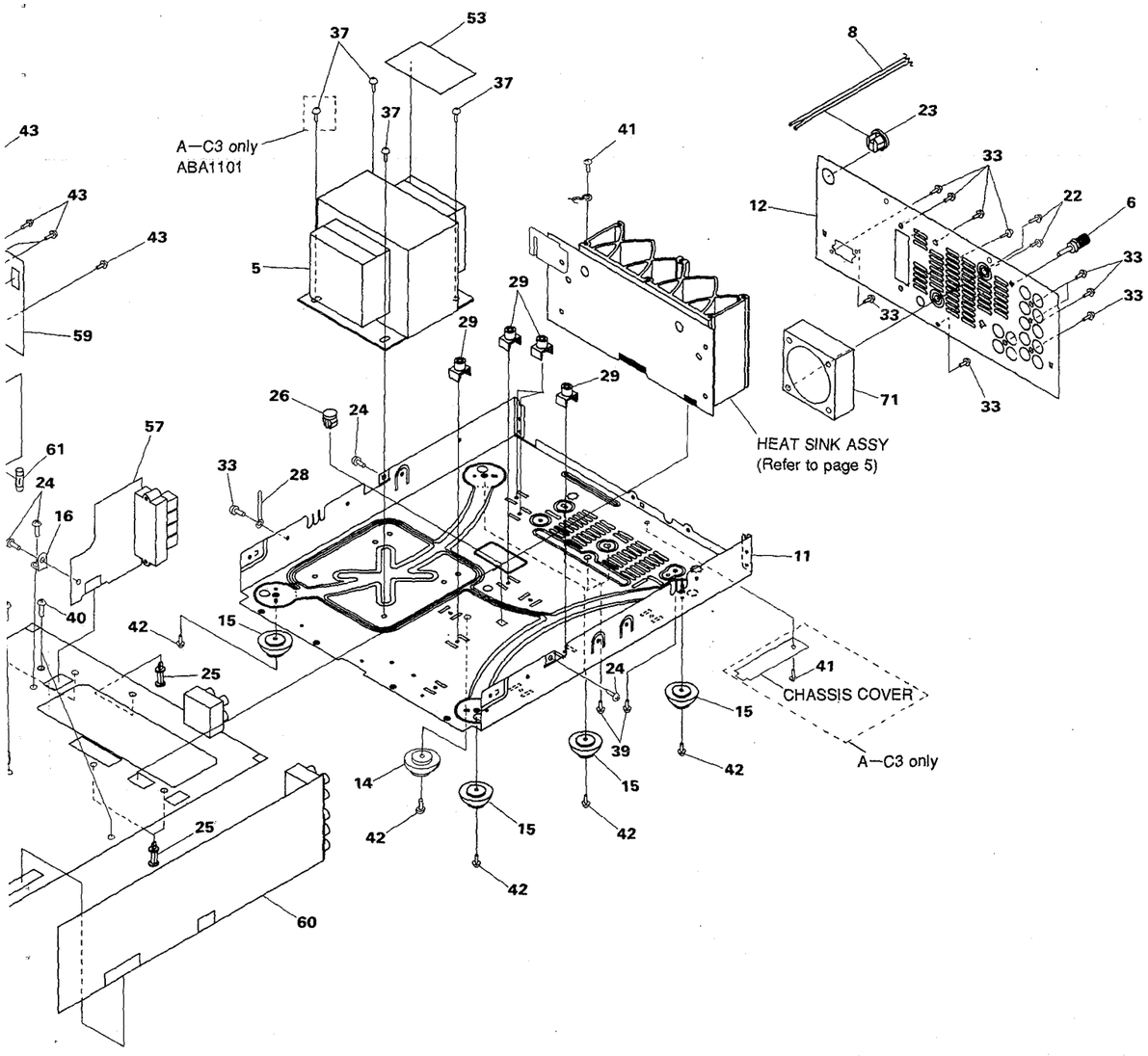

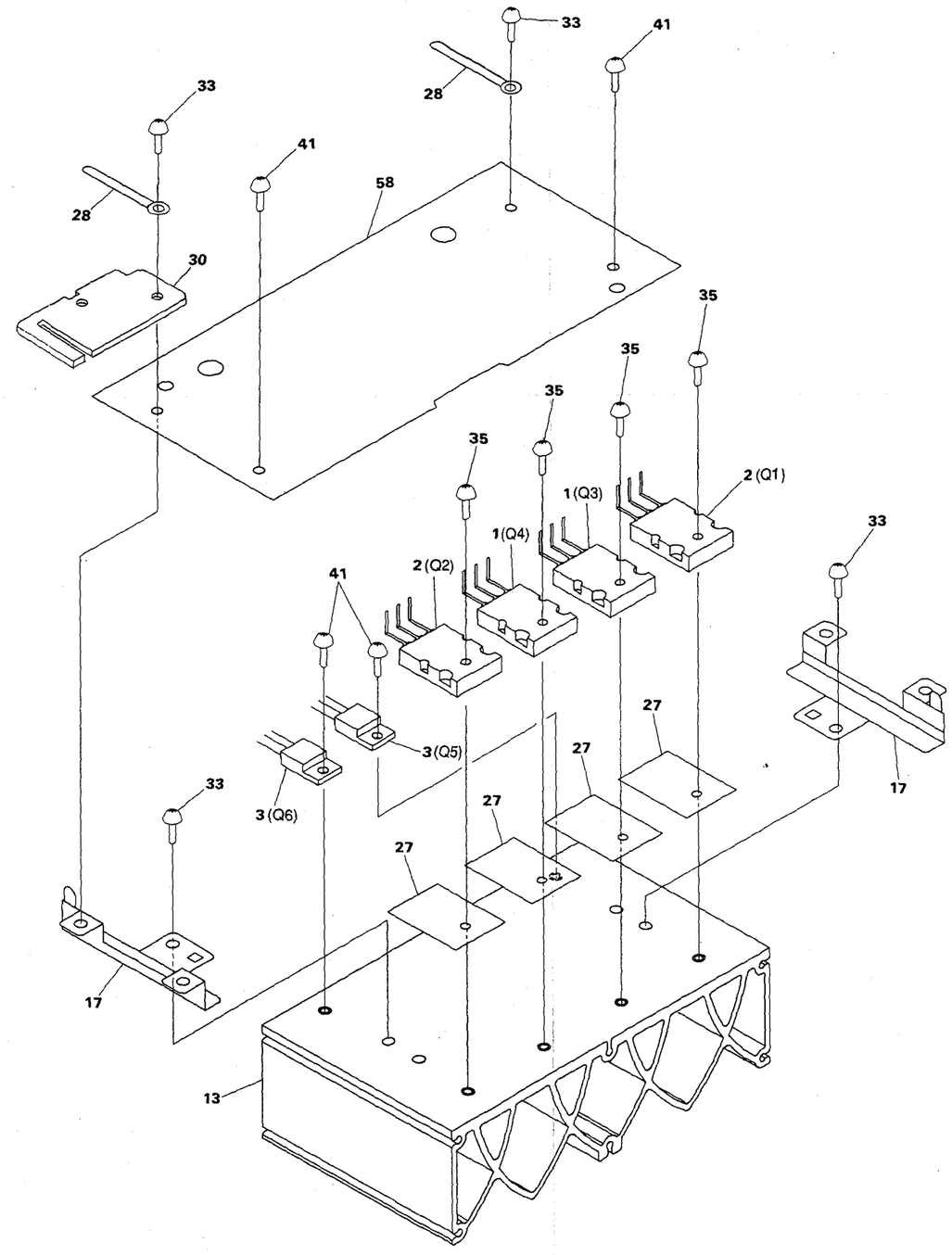

2. SCHEMATIC AND PCB CONNECTION DIAGRAMS

NOTE FOR SCHEMATIC DIAGRAMS (Type 1A)

1. **When ordering service parts, be sure to refer to "PARTS LIST of EXPLODED VIEWS" or "PCB PARTS LIST".**
2. **Since these are basic circuits, some parts of them or the values of some components may be changed for improvement.**
3. **RESISTORS:**
   Unit: k:kΩ, M:MΩ, or Ω unless otherwise noted.
   Rated power: 1/4W, 1/6W, 1/8W, 1/10W unless otherwise noted.
   Tolerance: (F): ±1%, (G): ±2%, (K): ±10%, (M): ±20% or ±5% unless otherwise noted.
4. **CAPACITORS:**
   Unit: p:pF or μF unless otherwise noted.
   Ratings: capacitor (μF)/ voltage (V) unless otherwise noted.
   Rated voltage: 50V except for electrolytic capacitors.
5. **COILS:**
   Unit: m:mH or μH unless otherwise noted.
6. **VOLTAGE AND CURRENT:**
   ▭V : Signal voltage at rated output.
   ▭ or ← V :
   DC voltage (V) at no input signal unless otherwise noted.
   Value in ( ) is DC voltage at rated power.
   ⇦ mA or ← mA :
   DC current at no input signal unless otherwise noted.
7. **OTHERS:**
   - ⊘ or ◐ : Adjusting point.
   - ⊸ : Measurement point.
   - The ⚠ mark found on some component parts indicates the importance of the safety factor of the parts. Therefore, when replacing, be sure to use parts of identical designation.
8. **SCH—□ ON THE SCHEMATIC DIAGRAM:**
   - SCH—□ indicates the drawing number of the schematic diagram. (SCH stands for schematic diagram.)
9. **SWITCHES** (Underline indicates switch position):
   FRONT ASSY
   S1901 : LOUDNESS
   S1902 : TAPE2/AUX
   S1903 : TAPE1
   S1904 : CD
   S1905 : TUNER
   S1906 : PHONO
   S1907 : DIRECT
   S1908 : POWER

NOTE FOR PCB DIAGRAMS:

1. Part numbers in PCB diagrams match those in the schematic diagrams.
2. A comparison between main parts of PCB and schematic diagrams is shown below.

Symbol in PCB Diagrams	Symbol in Schematic Diagrams	Part Name
Q504 (E, B, C) / Q504	Q504 Q504	Transistor
D203 / D203	D203	Diode
C513 / C513	C513	Capacitor (Polarized)

3. The transistor terminal marked with E or ⊏ shows the emitter.
4. The diode terminal marked with ◎ or ⊂ shows cathode side.
5. The capacitor terminal marked with ◎ or ⊏ shows negative terminal.

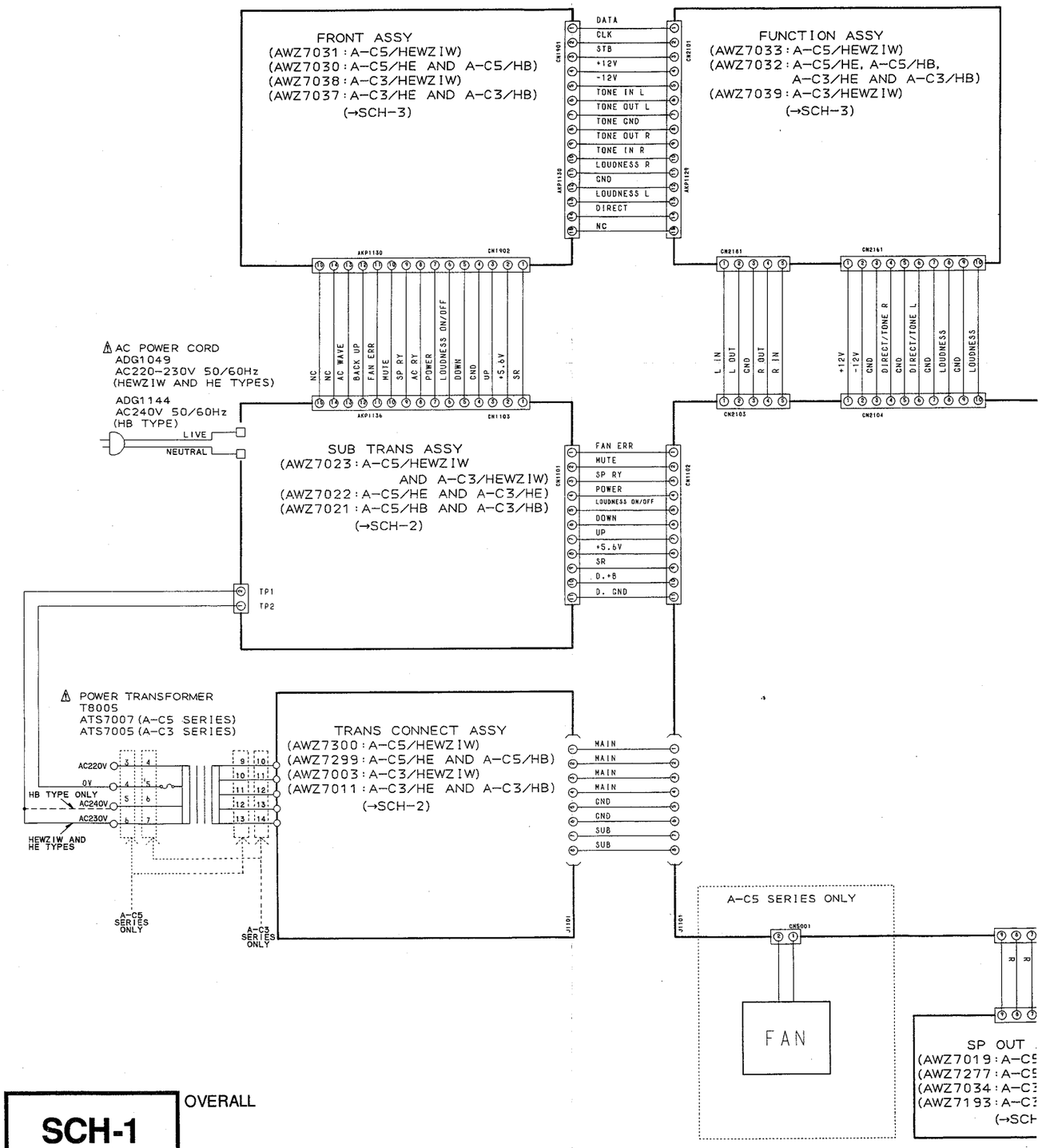

SCH-1 OVERALL

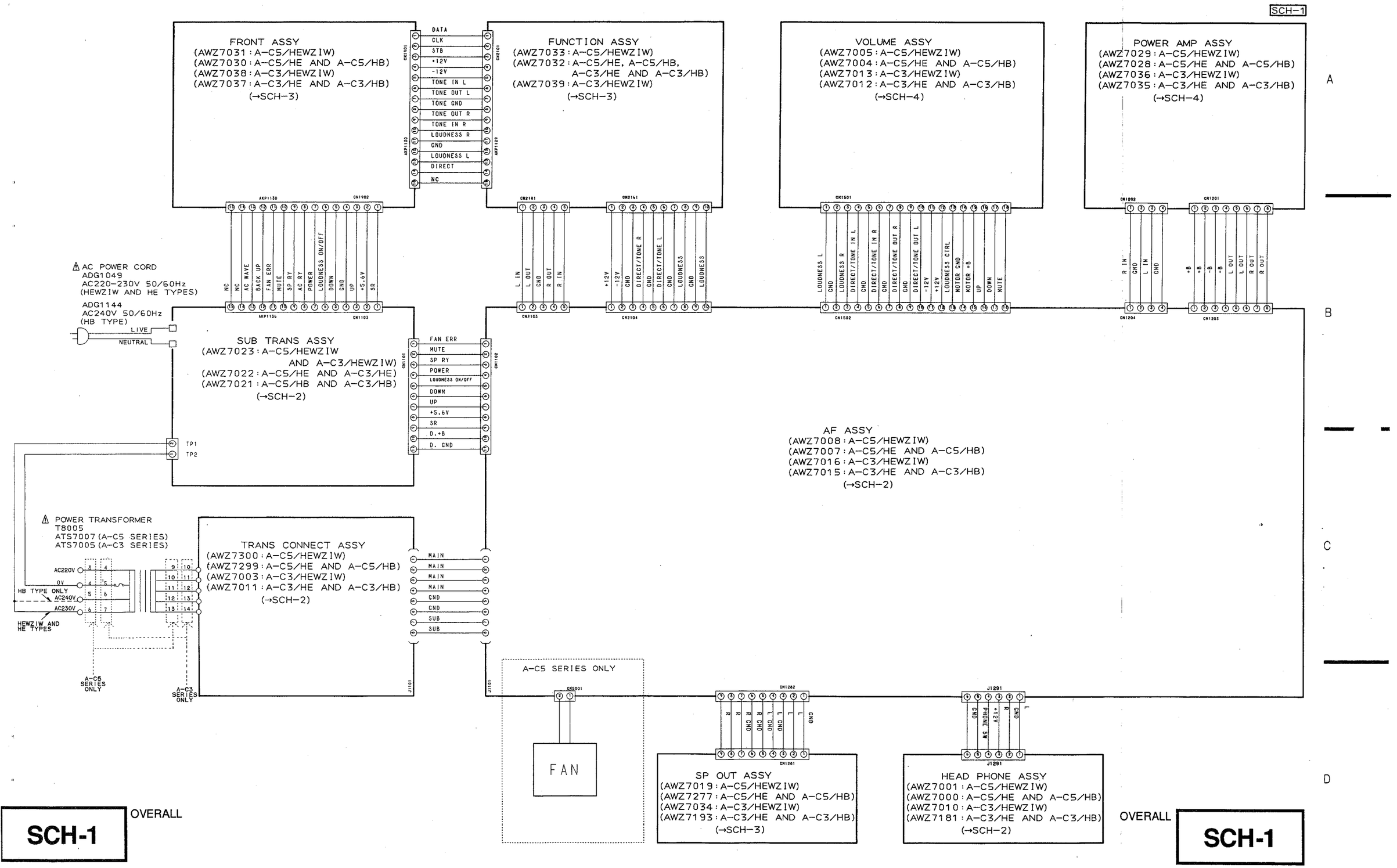

OVERALL SCH-1

2.2 AF, HEAD PHONE, TRANS CONNECT AND SUB TRANS ASSY

- This diagram is viewed from the foil side.

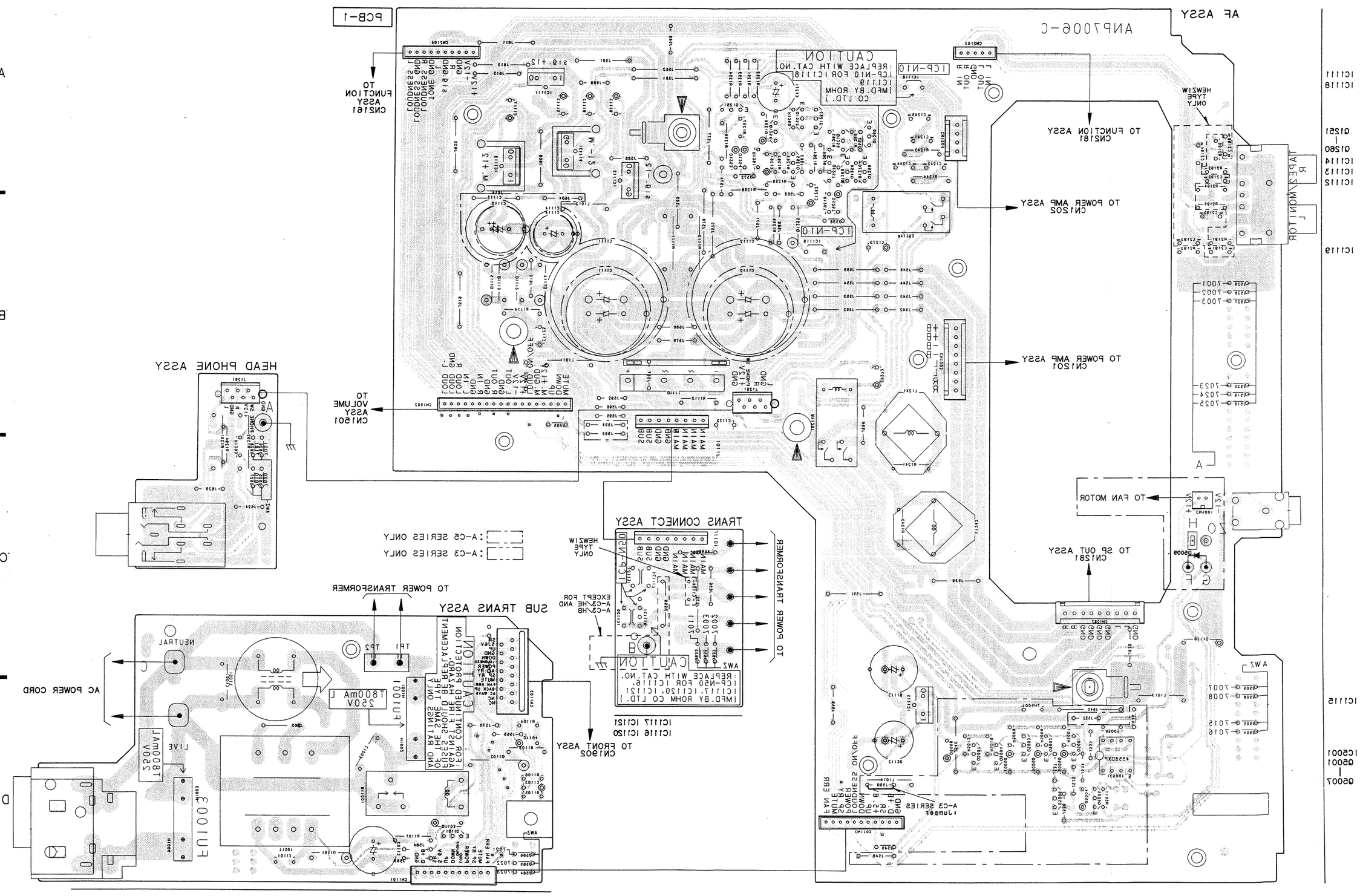
AF ASSY
ANP1006-C
PCB-1
TO FUNCTION ASSY CN181
TO POWER AMP ASSY CN202
TO POWER AMP ASSY CN201
TO VOLUME ASSY CN501
TO FAN MOTOR
TO SP OUT ASSY CN281
HEAD PHONE ASSY
TRANS CONNECT ASSY
TO POWER TRANSFORMER
SUB TRANS ASSY
TO POWER TRANSFORMER
AC POWER CORD
TO FRONT ASSY CN502
A-C5 SERIES ONLY
A-C3 SERIES ONLY
HEWZIW TYPE ONLY
EXCEPT FOR A-C3/HE AND A-C3/HB
A-C3 SERIES :Jumper
CAUTION
:REPLACE WITH CAT.NO. ICP-N10 FOR IC1118
(MFD. BY ROHM CO LTD.)
CAUTION
:REPLACE WITH CAT.NO. ICP-N50 FOR IC1116, IC1117, IC1120, IC1121
(MFD. BY ROHM CO LTD.)
CAUTION
NO CONTINUED DANGER OF FIRE OR ELECTRIC SHOCK DUE TO THE SAME TYPE AND RATING FUSE SHOULD BE USED FOR REPLACEMENT
T800mA L 250V
F1001
JA002T
JA003T
NEUTRAL
LIVE
ICP-N10
ICP-N10
IC1117 IC1121
IC1116 IC1120
IC1115
IC5001
Q5001
Q5007
IC1101
Q1101
D1101
D1102
D1103
D1104
D1105
D1106
D1107
D1108
D1109
D1110
D1111
D1112
D1113
D1114
D1115
D1116
D1117
D1118
D1119
D1120
D1121
D1122
D1123
D1124
D1125
D1126
D1127
D1128
D1129
D1130
D1131
D1132
D1133
D1134
D1135
D1136
D1137
D1138
D1139
D1140

2.2 AF, HEAD PHONE, TRANS CONNECT AND SUB TRANS ASSY

● This diagram is viewed from the mounted parts side.

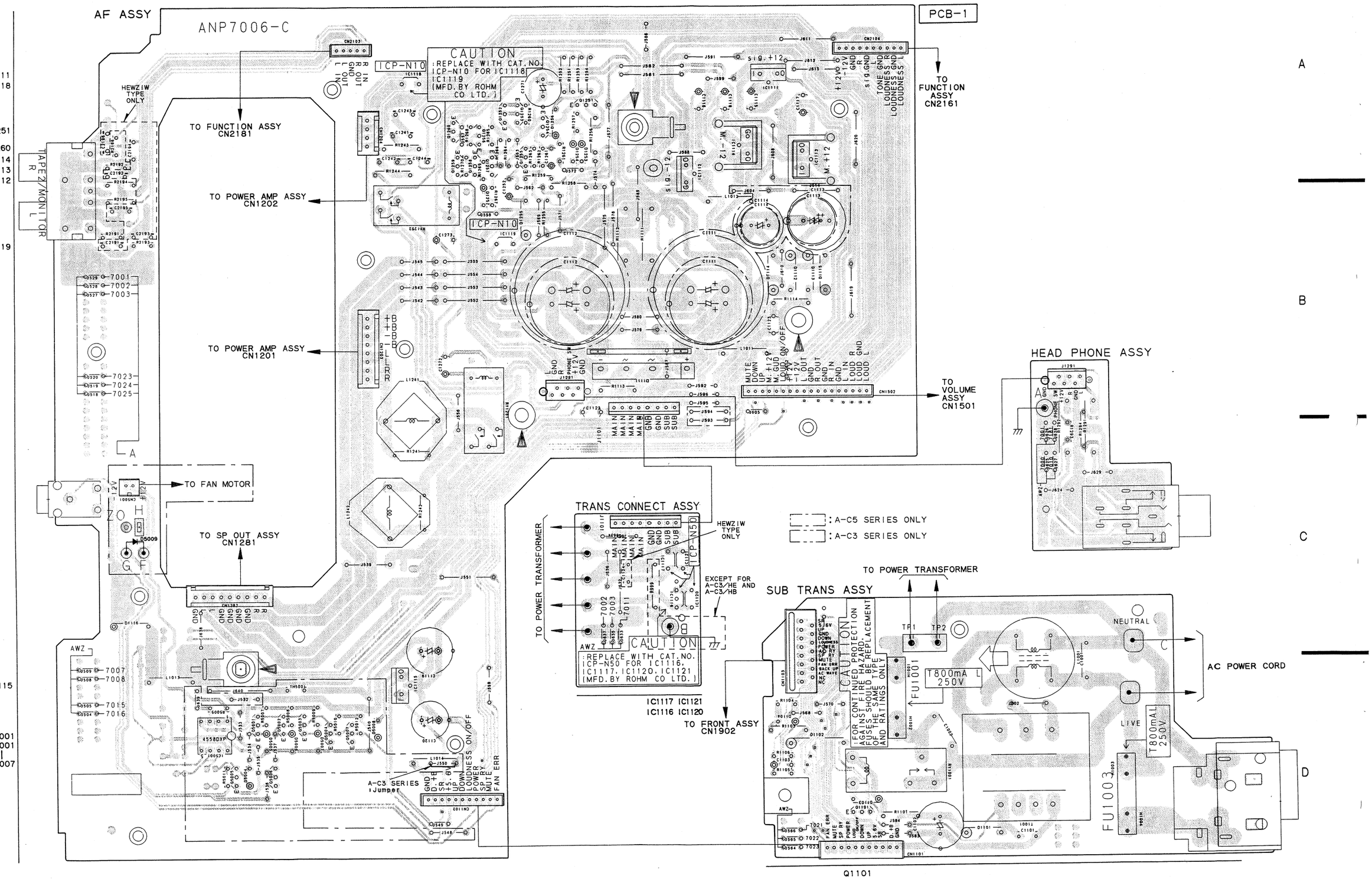

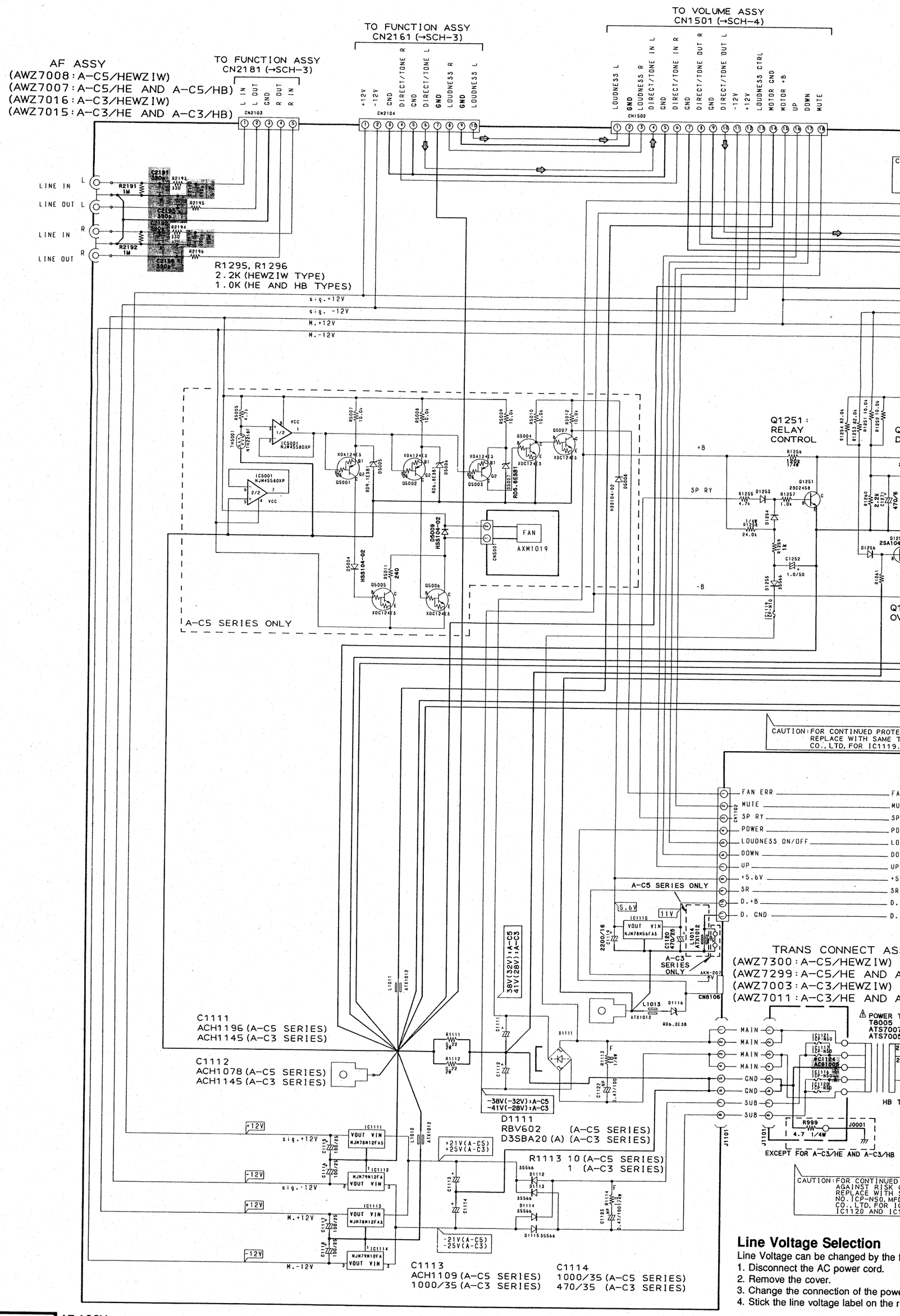

Line Voltage Selection

Line Voltage can be changed by the f
1. Disconnect the AC power cord.
2. Remove the cover.
3. Change the connection of the powe
4. Stick the line voltage label on the r

Part No.	Description
AAX-193	220V label
AAX-192	240V label

SCH-2

AF ASSY,
HEAD PHONE ASSY,
TRANS CONNECT ASSY,
SUB TRANS ASSY

SCH-2

⇨:Signal route

▒:HEWZIW TYPE ONLY

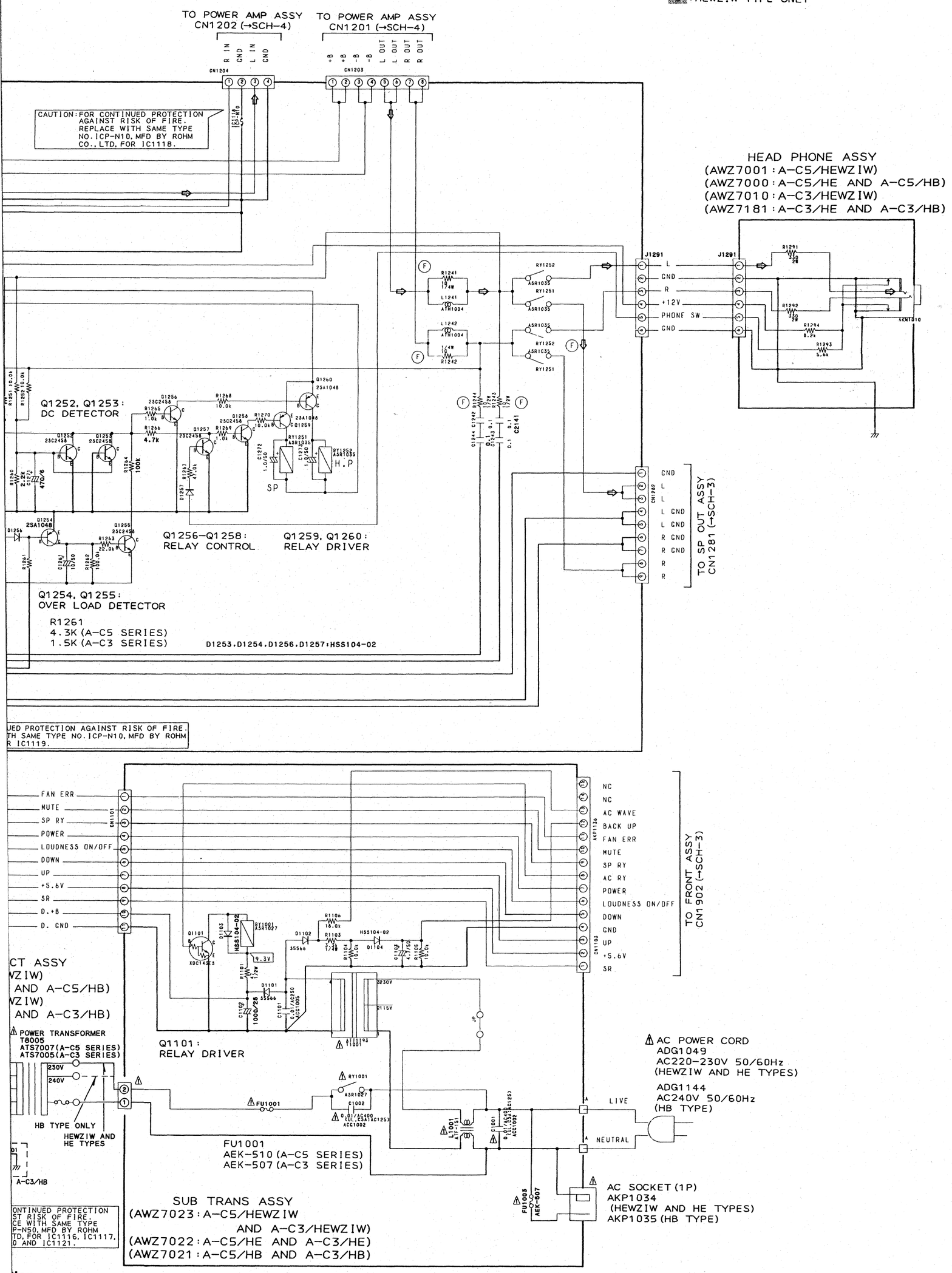

tion

d by the following modification:
cord.

f the power transformer primary taps.
l on the rear panel.

AF ASSY,
HEAD PHONE ASSY,
TRANS CONNECT ASSY,
SUB TRANS ASSY

SCH-2

2.3 FUNCTION, FRONT AND SP OUT ASSY

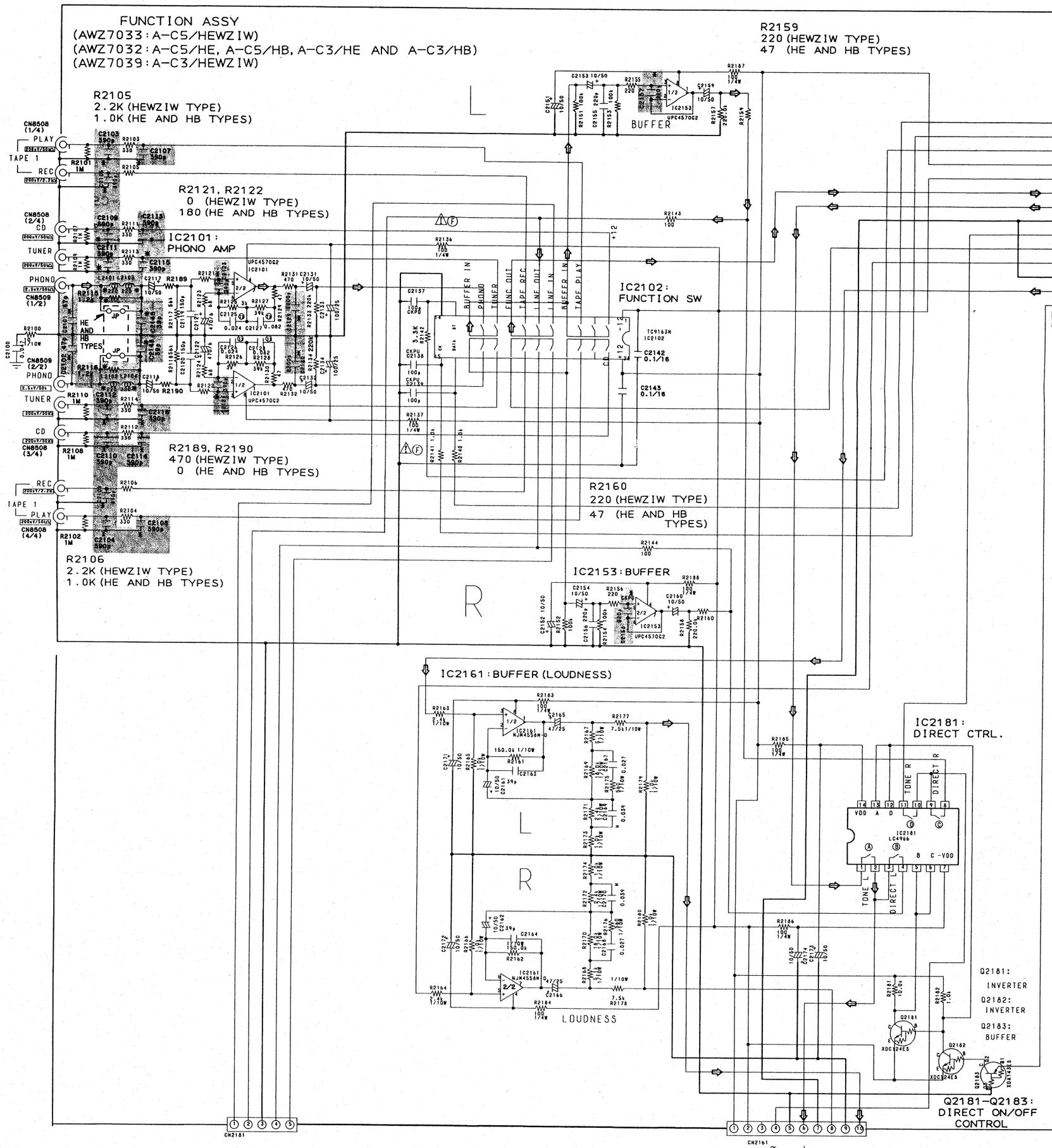

SCH-3 FUNCTION ASSY, FRONT ASSY, SP OUT ASSY

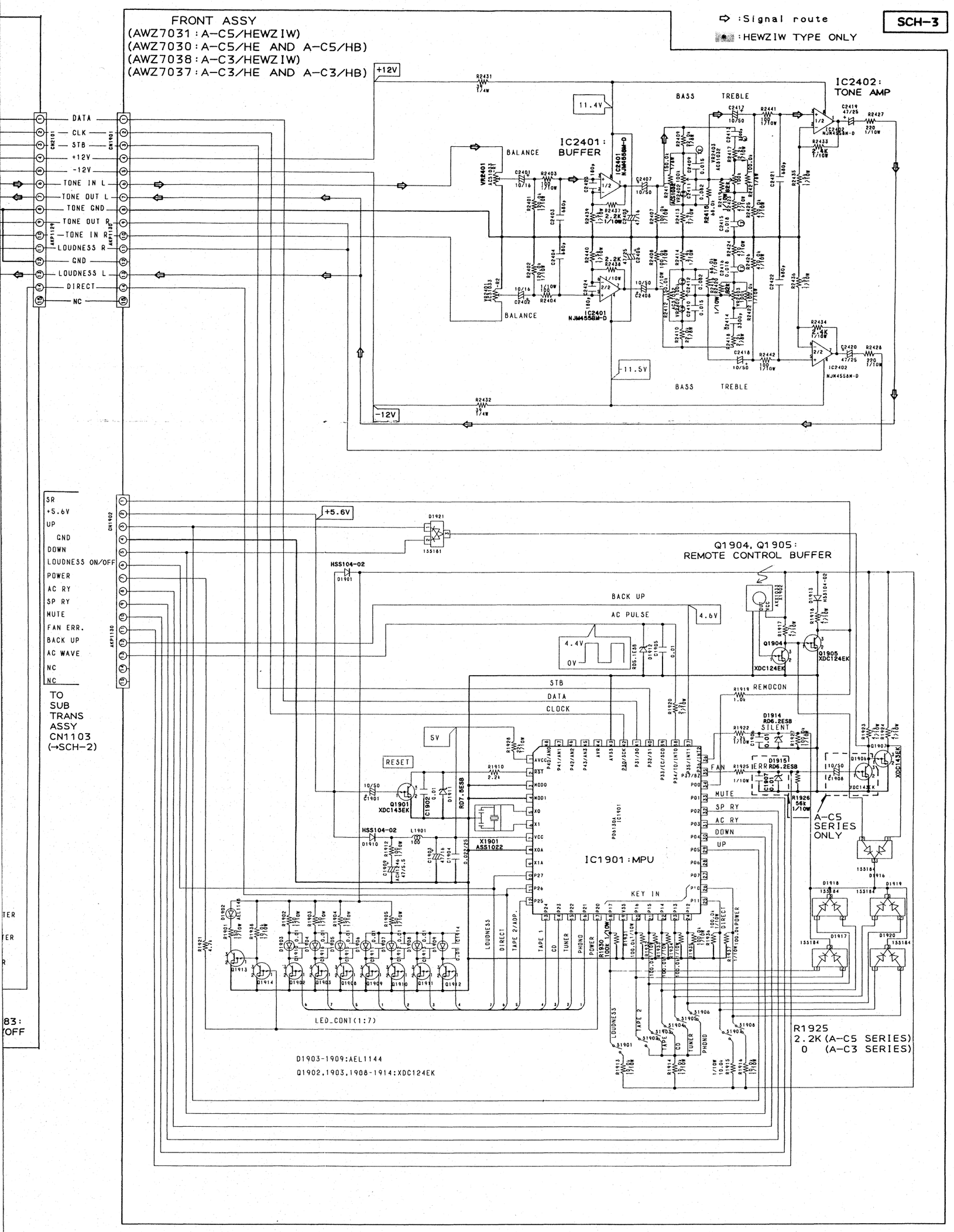

FUNCTION ASSY,
FRONT ASSY,
SP OUT ASSY

SCH-3

● This diagram is viewed from the mounted parts side.

PCB-2

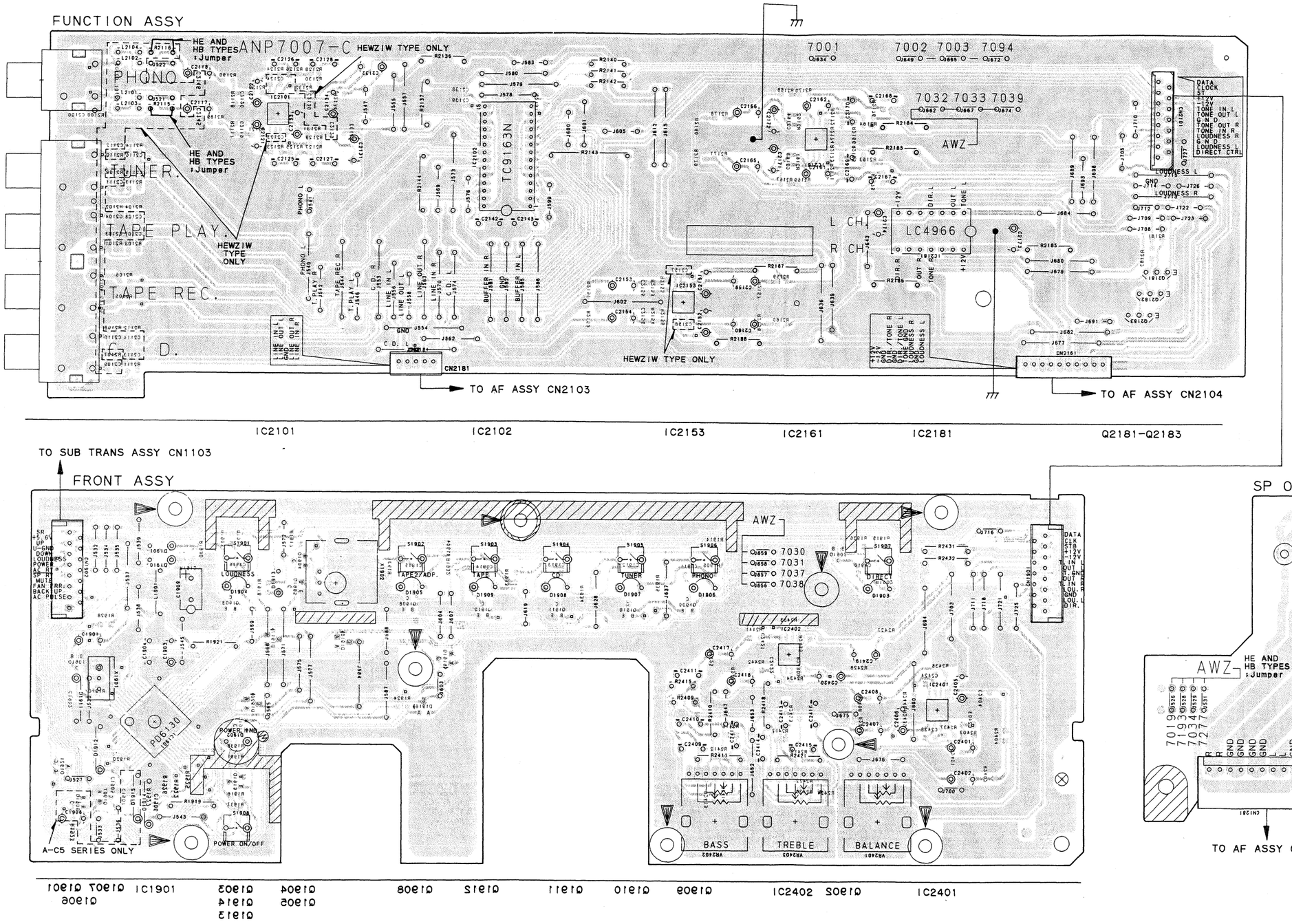

● This diagram is viewed from the foil side.

PCB-2

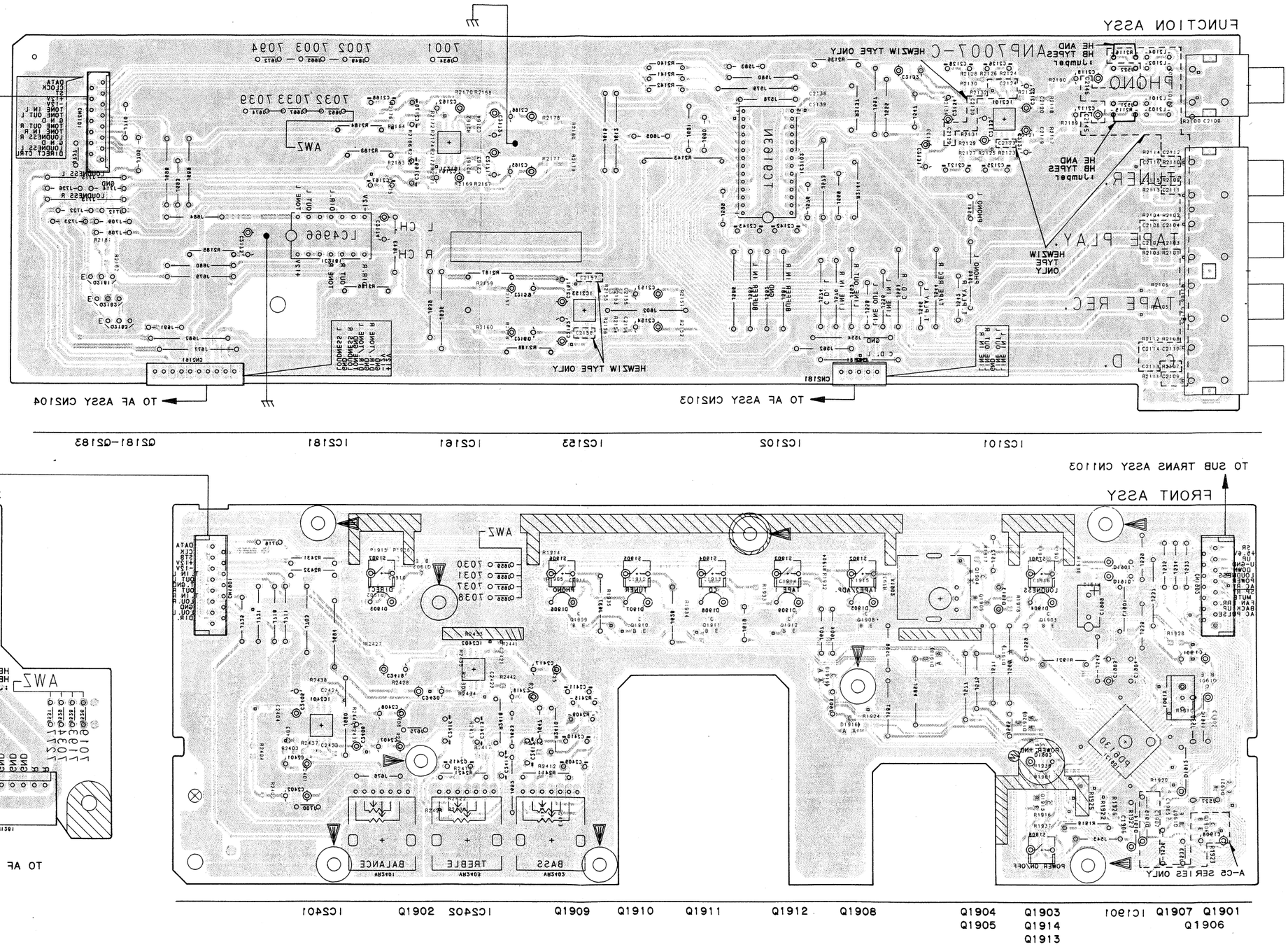

2.4 POWER AMP AND VOLUME ASSY

- This diagram is viewed from the foil side.

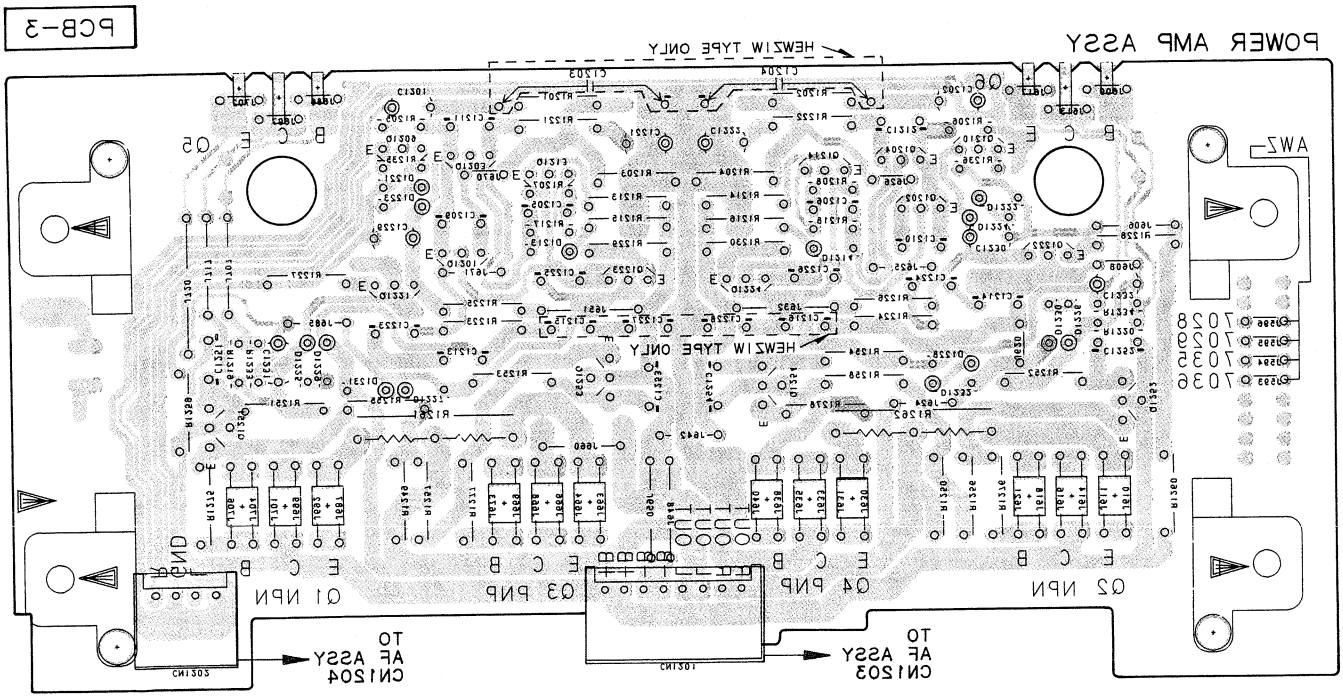

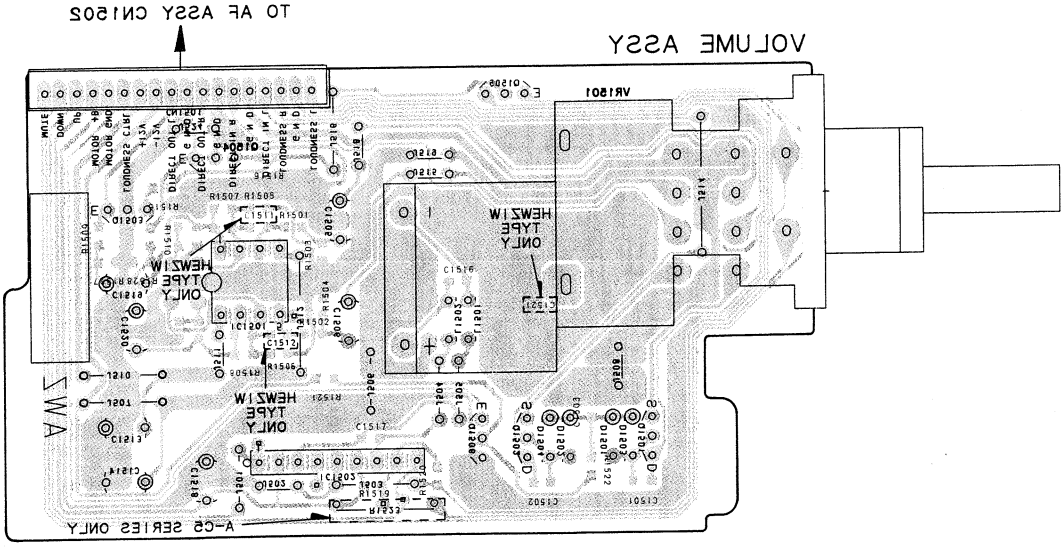

2.4 POWER AMP AND VOLUME ASSY

- This diagram is viewed from the mounted parts side.

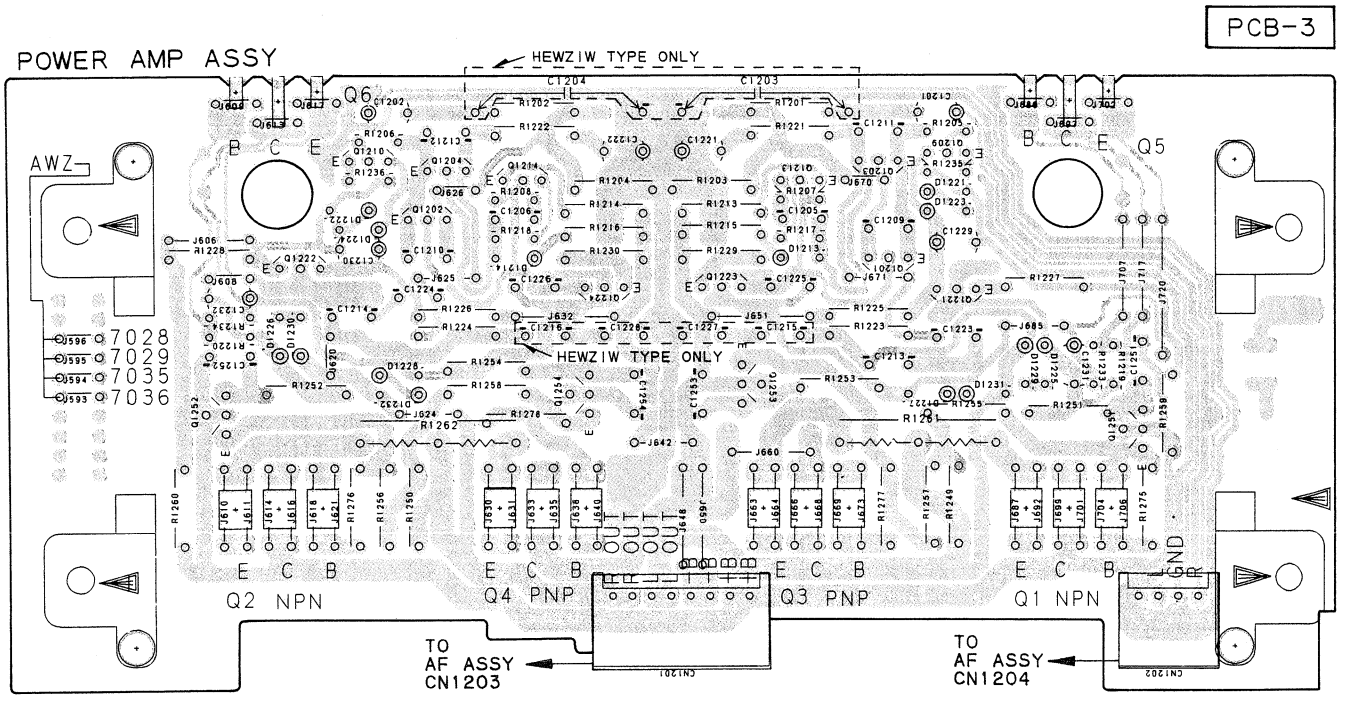

Q1252 Q1222 Q1210 Q1204 Q1214 Q1224 Q1223 Q1213 Q1203 Q1209 Q5 Q1251
Q6 Q1202 Q1254 Q1253 Q3 Q1201 Q1221 Q1
Q2 Q4

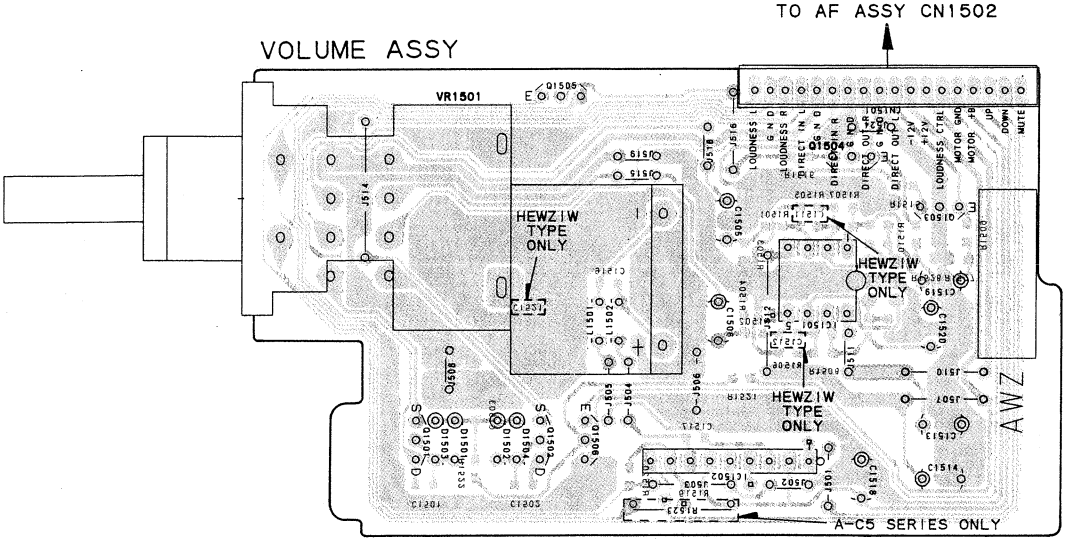

Q1501 Q1502 Q1506 IC1502 Q1504 Q1503
Q1505 IC1501

SCH-4

POWER AMP ASSY (AWZ7029 : A-C5/HEWZIW)
(AWZ7028 : A-C5/HE AND A-C5/HB)
(AWZ7036 : A-C3/HEWZIW)
(AWZ7035 : A-C3/HE AND A-C3/HB)

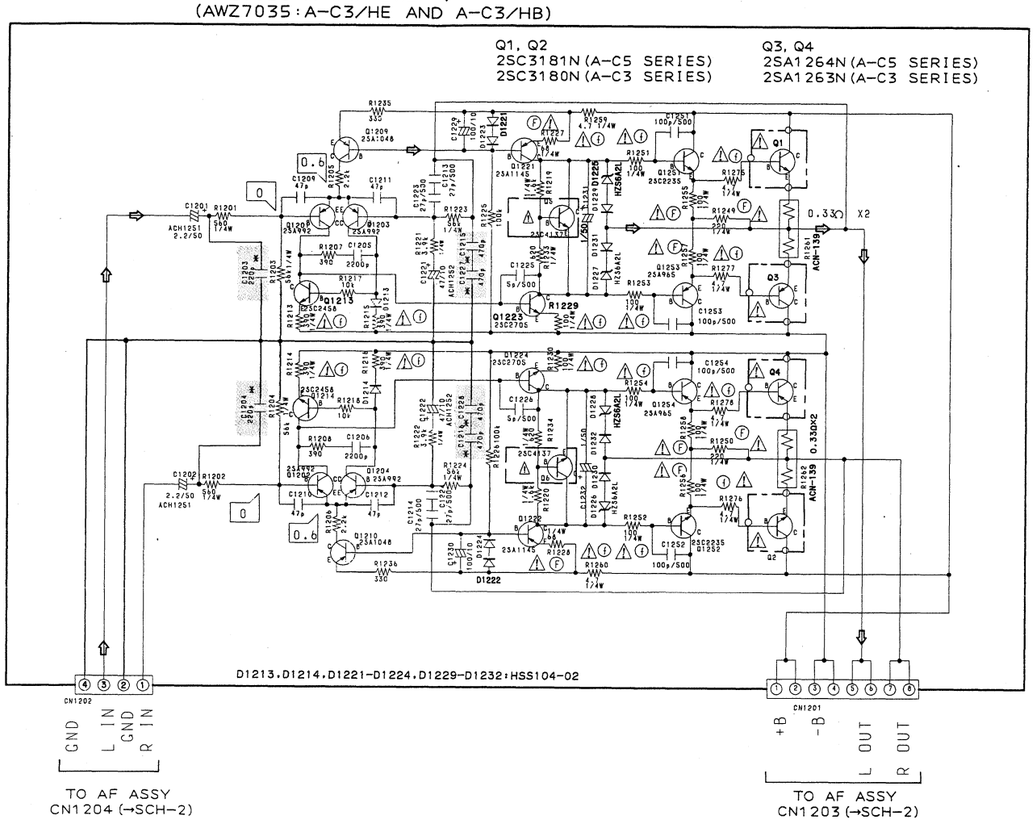

TO AF ASSY
CN1502 (→SCH-2)

- LOUDNESS L
- G N D
- LOUDNESS R
- DIRECT/TONE IN L
- G N D
- DIRECT/TONE IN R
- G N D
- DIRECT/TONE OUT R
- G N D
- DIRECT/TONE OUT L
- - 1 2 V
- + 1 2 V
- LOUDNESS CTRL
- MOTOR GND
- MOTOR +B
- U P
- DOWN
- MUTE

⇨ : Signal route

▒ : HEWZIW TYPE ONLY

VOLUME ASSY
(AWZ7005 : A-C5/HEWZIW)
(AWZ7004 : A-C5/HE AND A-C5/HB)
(AWZ7013 : A-C3/HEWZIW)
(AWZ7012 : A-C3/HE AND A-C3/HB)

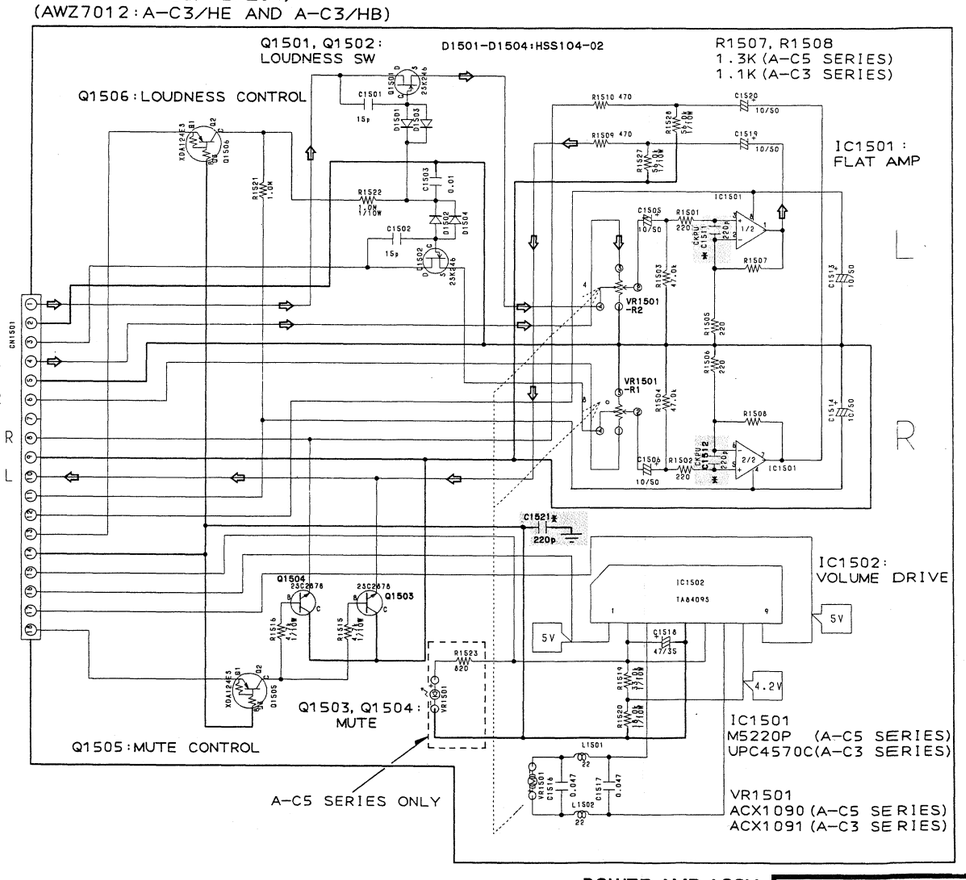

SCH-4 POWER AMP ASSY, VOLUME ASSY

POWER AMP ASSY, VOLUME ASSY SCH-4

3. PCB PARTS LIST

NOTES:
- *Parts marked by "NSP" are generally unavailable because they are not in our Master Spare Parts List.*
- *The ⚠ mark found on some component parts indicates the importance of the safety factor of the part. Therefore, when replacing, be sure to use parts of identical designation.*
- *Parts marked by " ◉" are not always kept in stock. Their delivery time may be longer than usual or they may be unavailable.*
- *When ordering resistors, first convert resistance values into code form as shown in the following examples.*

Ex.1 When there are 2 effective digits (any digit apart from 0), such as 560 ohm and 47k ohm (tolerance is shown by J = 5%, and K = 10%).

560Ω	→	*56×10¹* →	*561* ·····	*RD1/8PM[5][6][1]J*
47kΩ	→	*47×10³* →	*473* ·····	*RD1/4PS[4][7][3]J*
0.5Ω	→	*0R5* ·····		*RN2H[0][R][5]K*
1Ω	→	*010* ·····		*RS1P[0][1][0]K*

Ex.2 When there are 3 effective digits (such as in high precision metal film resistors).

5.62kΩ	→	*562×10¹* →	*5621* ·····	*RN1/4PC[5][6][2][1]F*

Mark	No.	Description	Parts No.
		LIST OF ASSEMBLIES	
		AMP AF ASSY	AWK7003
NSP		├─ HEAD PHONE ASSY	AWZ7001
NSP		├─ TRANS CONNECT ASSY	AWZ7300
		├─ AF ASSY	AWZ7008
		└─ SUB TRANS ASSY	AWZ7023
		AMP FUKUGOU ASSY	AWM7001
		├─ VOLUME ASSY	AWZ7005
NSP		├─ SP OUT ASSY	AWZ7019
		├─ POWER AMP ASSY	AWZ7029
		├─ FRONT ASSY	AWZ7031
		└─ FUNCTION ASSY	AWZ7033
		HEAD PHONE ASSY	
		RESISTORS	
	R1291,R1292		RS2LMF331J
		Other Resistors	RD1/8PM□□□J
		OTHERS	
		JACK	AKN1010
		TRANS CONNECT ASSY	
		SEMICONDUCTORS	
	IC1116,IC1117,IC1120,IC1121		ICP−N50
		CAPACITORS	
	C1124	(0.01/150V)	ACG1005
		RESISTORS	
		Other Resistors	RD1/4PM□□□J
		AF ASSY	
		SEMICONDUCTORS	
	IC1118,IC1119		ICP−N10
	IC5001		NJM4558DXP
	IC1111,IC1113		NJM78M12FAS
	IC1115		NJM78M56FAS
	IC1112,IC1114		NJM79M12FA
	Q1254,Q1259,Q1260		2SA1048
	Q1251−Q1253,Q1255−Q1258		2SC2458
	Q5001−Q5003		XDA124ES
	Q5004−Q5007		XDC124ES
	D1253,D1254,D1256,D1257,D5004		HSS104−02
	D5008,D5009		HSS104−02
	D1111		RBV602
	D5007		RD5.6ESB1
	D1116		RD6.2ESB
	D5006		RD6.8ESB1
	D5005		RD9.1ESB1
	D1112−D1115,D1255		S5566
	TH5001		NTH2218F
		COILS AND FILTERS	
	L1241,L1242	(0.7UH)	ATH1004
	L1011−L1014		ATX1012
		SWITCHES AND RELAYS	
	RY1251,RY1252		ASR1035
		CAPACITORS	
	C1112	(10000/50V)	ACH1078
	C1113	(2200/42V)	ACH1109
	C1111	(10000/50V)	ACH1196
	C1122,C1123		CEANPR47M100
	C1252,C1272,C1273		CEAS010M50
	C1261		CEAS100M50
	C1115−C1118		CEAS101M25
	C1114		CEAS102M35
	C1119		CEAS222M16
	C1120		CEAS471M25
	C1271		CEAS471M6
	C1241−C1244		CFTYA104J50
	C2191−C2196		CKCYB391K50
		RESISTORS	
	R1243,R1244		RD1/2PMF100J
	R1256		RD1/4PM124J
	R1258		RD1/4PM243J
	R1114		RD1/4PMF010J
	R1113,R1241,R1242		RD1/4PMF100J
	R1111,R1112		RS2LMFR22J
		Other Resistors	RD1/8PM□□□J
		OTHERS	
		SCREW	ABA−298
		PIN JACK 4−P(TAPE2/AUX)	AKB1141
	CN8106	JACK	AKN−207
		PCB BINDER	VEF1008
		SUB TRANS ASSY	
		SEMICONDUCTORS	
	Q1101		XDC143ES
	D1103,D1104		HSS104−02
	D1101,D1102		S5566
		COILS AND FILTERS	
⚠	L1001	(0.8/250V)	ATF−151
		TRANSFORMERS	
⚠	T1001	(1.6VA)	ATT1193
		SWITCHES AND RELAYS	
⚠	RY1001		ASR1027
		CAPACITORS	
⚠	C1001,C1002	(0.01/400V)	ACG1002
	C1101	(0.01/150V)	ACG1005
	C1102		CEAS102M25
	C1103		CEAS4R7M50
		RESISTORS	
	R1101		RD1/2PM470J
	R1103		RD1/4PM332J
		Other Resistors	RD1/8PM□□□J
		OTHERS	
⚠		AC SOCKET 1−P	AKP1034
	CN1103	15P SOCKET	AKP1136
		VOLUME ASSY	
		SEMICONDUCTORS	
	IC1501		M5220P
	IC1502		TA8409S
	Q1503,Q1504		2SC2878
	Q1501,Q1502		2SK246
	Q1505,Q1506		XDA124ES
	D1501−D1504		HSS104−02
		COILS AND FILTERS	
	L1501,L1502		LAU220K
		CAPACITORS	
	C1511,C1512,C1521		CCSQCH221J50
	C1501,C1502		CCSQSL150J50
	C1505,C1506,C1513,C1514		CEAS100M50
	C1519,C1520		CEAS100M50
	C1518		CEAS470M35
	C1503		CKSQYB103K50
	C1516,C1517		CKSQYF473Z50
		RESISTORS	
	R1523		RS1PMF821J
	VR1501	(50K)	ACX1090
		Other Resistors	RS1/10S□□□J
		SP OUT ASSY	
		COILS AND FILTERS	
	L1281,L1282	(1UH)	ATH−133
		CAPACITORS	
	C1283,C1284		CQMA273J50
		RESISTORS	
	R1281,R1282		RD1/2PMF101J
		OTHERS	
		SPEAKER TERMINAL 4−P	AKE1013
		POWER AMP ASSY	
		SEMICONDUCTORS	
	Q1209,Q1210		2SA1048
	Q1221,Q1222		2SA1145
	Q1253,Q1254		2SA965
	Q1201−Q1204		2SA992
	Q1251,Q1252		2SC2235
	Q1213,Q1214		2SC2458
	Q1223,Q1224		2SC2705
	D1213,D1214,D1221−D1224		HSS104−02
	D1229−D1232		HSS104−02
	D1225−D1228		HZS6A2L
		CAPACITORS	
	C1201,C1202	(2.2/50V)	ACH1251
	C1221,C1222	(4.7/10V)	ACH1252
	C1225,C1226		CCCSL050C500
	C1251−C1254		CCCSL101K500
	C1213,C1214,C1223,C1224		CCCSL270K500
	C1209−C1212		CCCSL470J50
	C1203,C1204		CCDSL221J50
	C1231,C1232		CEAS010M50
	C1229,C1230		CEAS101M10
	C1205,C1206		CKCYB222K50
	C1215,C1216,C1227,C1228		CKCYB471K50
		RESISTORS	
	R1261,R1262	(0.33/5W)	ACN−139
	R1201,R1202		RD1/4PM561J
	R1203,R1204,R1223,R1224		RD1/4PM563J
	R1255−R1258		RD1/4PMF101J
	R1249,R1250		RD1/4PMF221J
⚠	R1227,R1228		RD1/4PMF680J
	R1221,R1222		RDR1/4PM392J
⚠	R1229,R1230,R1251−R1254		RFA1/4PS101J
⚠	R1213−R1216		RFA1/4PS391J
⚠	R1259,R1260,R1275−R1278		RFA1/4PS4R7J
	R1219,R1220		RN1/4PC1601F
	R1233,R1234		RN1/4PC6200F
		Other Resistors	RD1/8PM□□□J

Mark	No.	Description	Parts No.
FRONT ASSY			
SEMICONDUCTORS			
	IC2401,IC2402		NJM4558M−D
	IC1901		PD6130A
	Q1902−Q1905,Q1908−Q1914		XDC124EK
	Q1901,Q1906,Q1907		XDC143EK
	D1921		1SS181
	D1916−D1920		1SS184
	D1903−D1909		AEL1144
	D1902		AEL1148
	D1901,D1910,D1913		HSS104−02
	D1912		RD5.1ESB
	D1914,D1915		RD6.2ESB
	D1911		RD7.5ESB
COILS AND FILTERS			
	L1901		LAU101K
SWITCHES AND RELAYS			
	S1901−S1908		ASG1034
CAPACITORS			
	C1909		ACH1246
	C2423,C2424		CCSQCH181J50
	C2407,C2408,C2417,C2418		CEAS100M50
	C2406,C2419,C2420		CEAS470M25
	C2401,C2402		CEJA100M16
	C1901,C1908		CEJA100M50
	C1903,C2405		CEJA470M16
	C2409,C2410		CFTXA153J50
	C2415,C2416		CFTXA183J50
	C2411,C2412		CFTXA823J50
	C1904		CKPUYF223Z25
	C1902,C1905−C1907,C1910−C1916		CKSQYB103K50
	C2403,C2404,C2421,C2422		CKSQYB681K50
	C2413,C2414		CQMA332J50
RESISTORS			
	R2431,R2432		RD1/4PM390J
	R1919		RD1/8PM102J
	R2421		RD1/8PM104J
	R2411		RD1/8PM154J
	R2418		RD1/8PM222J
	R2409,R2410		RD1/8PM223J
	R1921		RD1/8PM472J
	R2415		RD1/8PM683J
	VR2402,VR2403	(100K)	ACS1032
	VR2401		ACS1033
		Other Resistors	RS1/10S□□□J
OTHERS			
	CN1901,CN1902	15P SOCKET	AKP1130
	X1901	CERAMIC OSCILLATOR	ASS1022
		REMOTE RECEIVER UNIT	AXX1033
FUNCTION ASSY			
SEMICONDUCTORS			
	IC2181		LC4966
	IC2161		NJM4558M−D
	IC2102		TC9163N
	IC2101,IC2153		UPC4570G2
	Q2183		XDA143ES
	Q2181,Q2182		XDC124ES

Mark	No.	Description	Parts No.
COILS AND FILTERS			
	L2101−L2104		LAU221K
CAPACITORS			
	C2137−C2139		CCSQCH101J50
	C2119,C2120		CCSQCH151J50
	C2155−C2158		CCSQCH221J50
	C2145,C2146		CCSQCH390J50
	C2103−C2116,C2123,C2124		CCSQCH391J50
	C2101,C2102		CCSQCH470J50
	C2163,C2164		CCSQSL390J50
	C2117,C2118,C2131,C2132		CEAS100M50
	C2151−C2154,C2159−C2162		CEAS100M50
	C2171−C2174		CEAS100M50
	C2133,C2134		CEAS101M25
	C2165,C2166		CEAS470M25
	C2121,C2122		CEAS471M6
	C2125,C2126		CFTXA243J50
	C2127,C2128		CFTXA823J50
	C2142,C2143		CKCYX104M16
	C2129,C2130		CKSQYB222K50
	C2100		CKSQYF473Z50
	C2167,C2168		CQMA273J50
	C2169,C2170		CQMA393J50
RESISTORS			
⚠	R2136,R2137		RD1/4PMF101J
	R2183−R2188		RD1/4PMF101J
	R2143,R2144		RD1/8PM101J
	R2140−R2142		RD1/8PM102J
	R2115,R2116		RD1/8PM122J
		Other Resistors	RS1/10S□□□J
OTHERS			
	CN8509	PIN JACK(2P)(PHONO)	AKB1100
	CN8508	PIN JACK(8P) (TAPE1, TUNER, CD)	AKB1127
	CN2101	15P SOCKET	AKP1129
		PCB BINDER	VEF1008

4. BLOCK DIAGRAM

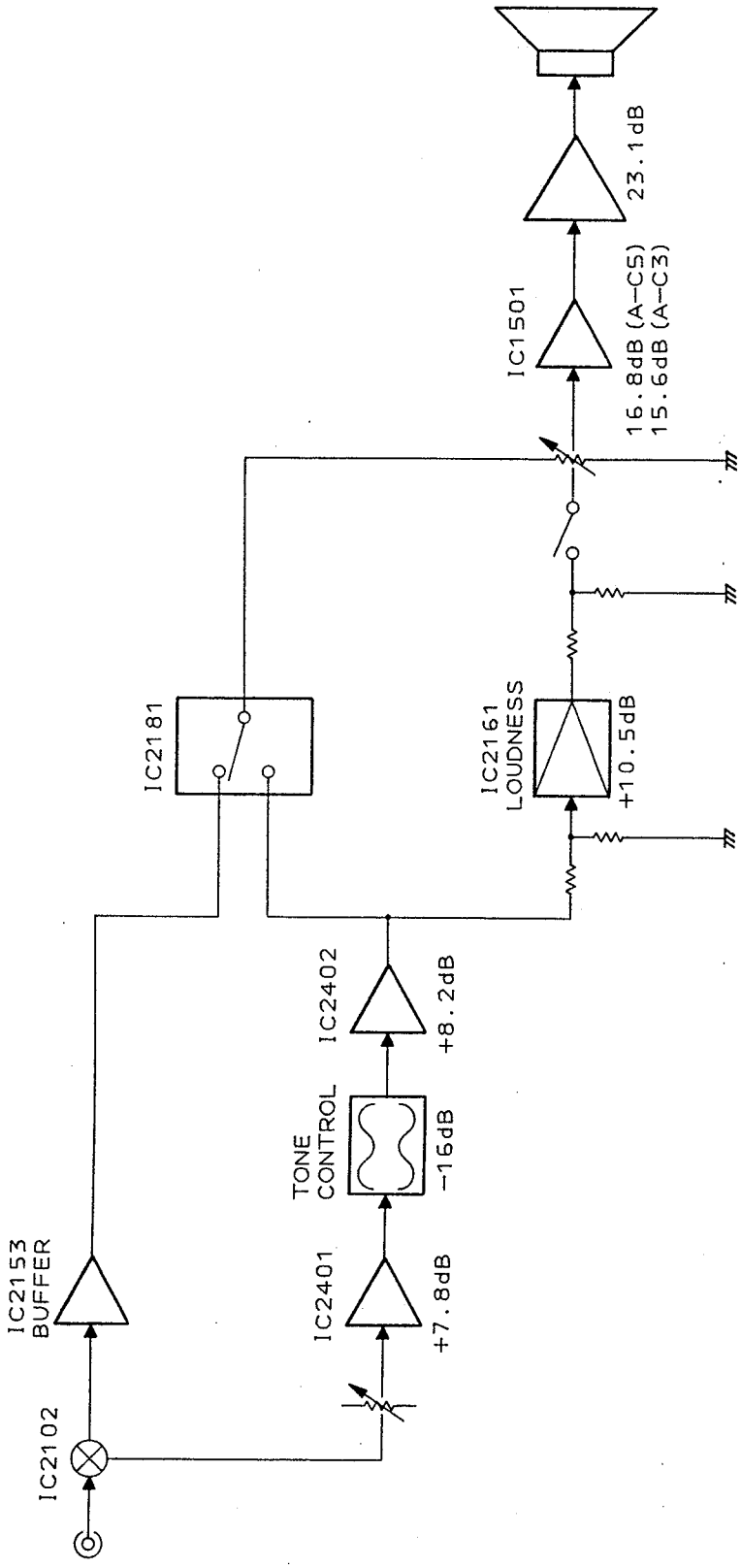

5. IC INFORMATION

● The information shown in the list is basic information and may not correspond exactly to that shown in the schematic diagrams.

■ PD6130A (IC1901)
● System control microcomputer

● Pin Assignment

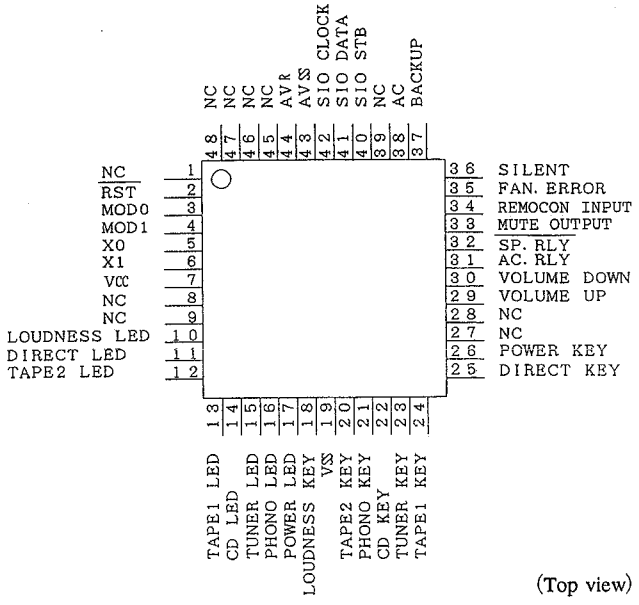

(Top view)

● Pin Function

I : CMOS input UN : Nch open drain output with pull up
O : CMOS Out N : Nch open drain output
HI : Hysteresis input

NO.	Name	I/O	Function	PORT
1	AVCC	—	Pull up	—
2	RST	HI/UN	Reset	Input
3	MOD0	I	CONNECT to VSS	
4	MOD1	I		
5	X0	—	OSCILLATOR	—
6	X1	—		—
7	VCC	—	+5V POWER SUPPLY	—
8	X0A	—	NC	—
9	X1A	—	GND	—
10	P27	O	LOUDNESS ON/OFF	
11	P26	O	DIRECT ON/OFF	
12	P25	O	LED TAPE2	
13	P24	O	TAPE1	
14	P23	O	CD	
15	P22	O	TUNER	
16	P21	O	PHONO	
17	P20	O	POWER	
18	P17	I/O	MAIN UNIT key LOUDNESS	Input
19	VSS	—	GND	—
20	P16	I/O	MAIN UNIT key TAPE2	Input
21	P15	I/O	PHONO	Input
22	P14	I/O	CD	Input
23	P13	I/O	TUNER	Input
24	P12	I/O	TAPE1	Input

NO.	Name	I/O	Function	PORT
25	P11	I/O	DIRECT	Input
26	P10	I/O	POWER	Input
27	P07	I/O	NC	Out
28	P06	I/O	NC	Out
29	P05	I/O	VOLUME UP (TA8409)	Out
30	P04	I/O	VOLUME DOWN	Out
31	P03	I/O	AC RLY	Out
32	P02	I/O	SP RLY	Out
33	P01	I/O	MUTE	Out
34	P00	I/O	REMOCON SIGNAL	Input
35	P37/BZ	HI/O	FAN. ERROR	Input
36	P36/INT2	HI/O	SILENT	Input
37	P35/INT1	HI/O	BACKUP	Input
38	P34/T0/INT0	HI/O	AC	Input
39	P33/EC/SC0	HI/O	NC	Out
40	P32/SI	HI/O	SIO STB	Out
41	P31/S0	HI/O	DATA	Out
42	P30/SCK	HI/O	CLOCK	Out
43	AVSS	—	NC	—
44	AVR	—	NC	—
45	P43/AN3	N	NC	
46	P42/AN2	N	NC	
47	P41/AN1	N	NC	
48	P40/AN0	N	NC	

6. FOR A—C5/HE, HB, A—C3/HEWZIW, HE AND HB TYPES

NOTES:
- *Parts marked by "NSP" are generally unavailable because they are not in our Master Spare Parts List.*
- *The ⚠ mark found on some component parts indicates the importance of the safety factor of the part. Therefore, when replacing, be sure to use parts of identical designation.*
- *Parts marked by " ◉" are not always kept in stock. Their delivery time may be longer than usual or they may be unavailable.*

A—C5/HE, HB, A—C3/HEWZIW, HE, HB and A—C5/HEWZIW have the same construction except for the following:

Mark	Symbol & Description	Part No.						Remarks
		A—C5			A—C3			
		HEWZIW	HE	HB	HEWZIW	HE	HB	
	AMP AF assembly	AWK7003	AWK7002	AWK7001	AWK7025	AWK7024	AWK7023	
NSP	HEAD PHONE assembly	AWZ7001	AWZ7000	AWZ7000	AWZ7010	AWZ7181	AWZ7181	
NSP	TRANS CONNECT assembly	AWZ7300	AWZ7299	AWZ7299	AWZ7003	AWZ7011	AWZ7011	
	AF assembly	AWZ7008	AWZ7007	AWZ7007	AWZ7016	AWZ7015	AWZ7015	
	SUB TRANS assembly	AWZ7023	AWZ7022	AWZ7021	AWZ7023	AWZ7022	AWZ7021	
	AMP FUKUGOU assembly	AWM7001	AWM7094	AWM7094	AWM7003	AWM7002	AWM7002	
	VOLUME assembly	AWZ7005	AWZ7004	AWZ7004	AWZ7013	AWZ7012	AWZ7012	
NSP	SP OUT assembly	AWZ7019	AWZ7277	AWZ7277	AWZ7034	AWZ7193	AWZ7193	
	POWER AMP assembly	AWZ7029	AWZ7028	AWZ7028	AWZ7036	AWZ7035	AWZ7035	
	FRONT assembly	AWZ7031	AWZ7030	AWZ7030	AWZ7038	AWZ7037	AWZ7037	
	FUNCTION assembly	AWZ7033	AWZ7032	AWZ7032	AWZ7039	AWZ7032	AWZ7032	
⚠	Power transformer (T8005)	ATS7007	ATS7007	ATS7007	ATS7005	ATS7005	ATS7005	
⚠	AC power cord	ADG1049	ADG1049	ADG1144	ADG1049	ADG1049	ADG1144	
⚠	Fuse (T1.6A/250V, FU1001)	AEK—510	AEK—510	AEK—510	.....	.....	.....	
⚠	Fuse (T800mA/250V, FU1001)	.....	.....	.....	AEK—507	AEK—507	AEK—507	
⚠	Transistor (Q3, Q4)	2SA1264N	2SA1264N	2SA1264N	2SA1263N	2SA1263N	2SA1263N	
⚠	Transistor (Q1, Q2)	2SC3181N	2SC3181N	2SC3181N	2SC3180N	2SC3180N	2SC3180N	
	Fan motor	AXM1019	AXM1019	AXM1019	.....	.....	.....	
	Flexible cable	AAD1130	AAD1130	AAD1130	AAD1129	AAD1129	AAD1129	
NSP	Heat sink	ANH7003	ANH7003	ANH7003	ANH7002	ANH7002	ANH7002	
	Front panel	AMB7045	AMB7045	AMB7045	AMB7046	AMB7046	AMB7046	
	Rear panel	ANC7062	ANC7062	ANC7062	ANC7067	ANC7067	ANC7067	
	Chassis cover	.....	.....	.....	AMR7009	AMR7009	AMR7009	*
	Volume assy	AAB7009	AAB7009	AAB7009	.....	.....	.....	
	Volume button	.....	.....	.....	AAB7010	AAB7010	AAB7010	For Volume assy
	Power button	AAD7013	AAD7013	AAD7013	AAD7014	AAD7014	AAD7014	
	Screw	BPZ45P100FZK	BPZ45P100FZK	BPZ45P100FZK	.....	.....	.....	
	Screw	.....	.....	.....	ABA1101	ABA1101	ABA1101	*
	Binder	.....	.....	AEC—093	.....	.....	AEC—093	
	Packing case	AHD7009	AHD7009	AHD7009	AHD7012	AHD7012	AHD7012	
	Operating instructions (German, Italian)	ARC7004	.....	.....	ARC7004	.....	.....	

Note; * : Refer to page 4.

Mark	Symbol & Description	Part No.						Remarks
		A—C5			A—C3			
		HEWZIW	HE	HB	HEWZIW	HE	HB	
	Operating instructions (English, French, German, Italian, Dutch, Swedish, Spanish, Portuguese)	.....	ARE7009	.....	.....	ARE7009	.....	
	Operating instructions (English)	.....	.....	ARB7004	.....	.....	ARB7004	

HEAD PHONE ASSEMBLY

●Although AWZ7000, AWZ7010, AWZ7181 and AWZ7001 are different in part number, they consist of the same components.

TRANS CONNECT ASSEMBLY

AWZ7299, AWZ7003, AWZ7011 and AWZ7300 have the same construction except for the following:

Mark	Symbol & Description	Part No.				Remarks
		AWZ7300	AWZ7299	AWZ7003	AWZ7011	
	C1124 (0.01/150V)	ACG1005	.....	ACG1005	.....	
	R999	RD1/4PMF4R7J	RD1/4PMF4R7J	RD1/4PMF4R7J	.....	

AF ASSEMBLY

AWZ7007, AWZ7016, AWZ7015 and AWZ7008 have the same construction except for the following:

Mark	Symbol & Description	Part No.				Remarks
		AWZ7008	AWZ7007	AWZ7016	AWZ7015	
	IC5001	NJM4558DXP	NJM4558DXP	.....	.....	
	Q5001—Q5003	XDA124ES	XDA124ES	.....	.....	
	Q5004—Q5007	XDC124ES	XDC124ES	.....	.....	
	D1111	RBV602	RBV602	D3SBA20(A)	D3SBA20(A)	
	D5004,D5008,D5009	HSS104—02	HSS104—02	.....	.....	
	D5005	RD9.1ESB1	RD9.1ESBI	.....	.....	
	D5006	RD6.8ESB1	RD6.8ESBI	.....	.....	
	D5007	RD5.6ESB1	RD5.6ESBI	.....	.....	
	TH5001	NTH2218F	NTH2218F	.....	.....	
	C1111 (10000μ/50V)	ACH1196	ACH1196	.....	.....	
	C1111,C1112(5600μ/50V)	.....	.....	ACH1145	ACH1145	
	C1112 (10000μ/50V)	ACH1078	ACH1078	.....	.....	
	C1113 (2200μ/42V)	ACH1109	ACH1109	.....	.....	
	C1113	.....	.....	CEAS102M35	CEAS102M35	
	C1114	CEAS102M35	CEAS102M35	CEAS471M35	CEAS471M35	
	C2191—C2196	CKCYB391K50	.....	CKCYB391K50	.....	

Mark	Symbol & Description	Part No.				Remarks
		AWZ7008	AWZ7007	AWZ7016	AWZ7015	
	R1113	RD1/4PMF100J	RD1/4PMF100J	RD1/4PMF010J	RD1/4PMF010J	
	R1261	RD1/8PM432J	RD1/8PM432J	RD1/8PM152J	RD1/8PM152J	
	R1295,R1296	RD1/8PM222J	RD1/8PM102J	RD1/8PM222J	RD1/8PM102J	
	R5005	RD1/8PM472J	RD1/8PM472J	.....	.....	
	R5007−R5010,R5012	RD1/8PM103J	RD1/8PM103J	.....	.....	
	R5011	RD1/8PM241J	RD1/8PM241J	.....	.....	
	L1014	ATX1012	ATX1012	.....	.....	
	PCB Binder	VEF1008	VEF1008	.....	.....	

SUB TRANS ASSEMBLY

AWZ7022, AWZ7021 and AWZ7023 have the same construction except for the following:

Mark	Symbol & Description	Part No.			Remarks
		AWZ7023	AWZ7022	AWZ7021	
⚠	AC Socket (1P)	AKP1034	AKP1034	AKP1035	

VOLUME ASSEMBLY

AWZ7004, AWZ7013, AWZ7012 and AWZ7005 have the same construction except for the following:

Mark	Symbol & Description	Part No.				Remarks
		AWZ7005	AWZ7004	AWZ7013	AWZ7012	
	IC1501	M5220P	M5220P	UPC4570C	UPC4570C	
	C1511,C1512,C1521	CCSQCH221J50	.....	CCSQCH221J50	.....	
	VR1501	ACX1090	ACX1090	ACX1091	ACX1091	
	R1507,R1508	RS1/10S132J	RS1/10S132J	RS1/10S112J	RS1/10S112J	
	R1523	RS1PMF821J	RS1PMF821J	.....	.....	

SP OUT ASSEMBLY

AWZ7277, AWZ7034, AWZ7193 and AWZ7019 have the same construction except for the following:

Mark	Symbol & Description	Part No.				Remarks
		AWZ7019	AWZ7277	AWZ7034	AWZ7193	
	L1281,L1282	ATH−133	.....	ATH−133	.....	
	C1283,C1284	CQMA273J50	.....	CQMA273J50	.....	
	R1281,R1282	RD1/2PMF101J	.....	RD1/2PMF101J	.....	

POWER AMP ASSEMBLY

AWZ7028, AWZ7036, AWZ7035 and AWZ7029 have the same construction except for the following:

Mark	Symbol & Description	Part No.				Remarks
		AWZ7029	AWZ7028	AWZ7036	AWZ7035	
	C1203,C1204	CCDSL221J50	.....	CCDSL221J50	.....	
	C1215,C1216,1227,C1228	CKCYB471K50	.....	CKCYB471K50	.....	

FRONT ASSEMBLY

AWZ7030, AWZ7038, AWZ7037 and AWZ7031 have the same construction except for the following:

Mark	Symbol & Description	Part No.				Remarks
		AWZ7031	AWZ7030	AWZ7038	AWZ7037	
	Q1906	XDC143EK	XDC143EK	.....	.....	
	D1915	RD6.2ESB	RD6.2ESB	.....	.....	
	C1907	CKSQYB103K50	CKSQYB103K50	.....	.....	
	C1908	CEJA100M50	CEJA100M50	.....	.....	
	R1925	RS1/10S222J	RS1/10S222J	RS1/10S000J	RS1/10S000J	

FUNCTION ASSEMBLY

AWZ7032 and AWZ7033 have the same construction except for the following:

Mark	Symbol & Description	Part No.		Remarks
		AWZ7033	AWZ7032	
	L2101 −L2104	LAU221K	.....	
	C2101,C2102	CCSQCH470J50	.....	
	C2103 −C2116,C2123,C2124	CCSQCH391J50	.....	
	C2129,C2130	CKSQYB222K50	.....	
	C2145,C2146	CCSQCH390J50	.....	
	C2157,C2158	CCSQCH221J50	.....	
	R2105,R2106	RS1/10S222J	RS1/10S102J	
	R2115,R2116	RD1/8PM122J	.....	
	R2121,R2122	RD1/10S000J	RS1/10S181J	
	R2159,R2160	RD1/10S221J	RS1/10S470J	
	R2189,R2190	RD1/10S471J	RS1/10S000J	

●Although AWZ7039 and AWZ7033 are different in part number, they consist of the same components.

7. PANEL FACILITIES

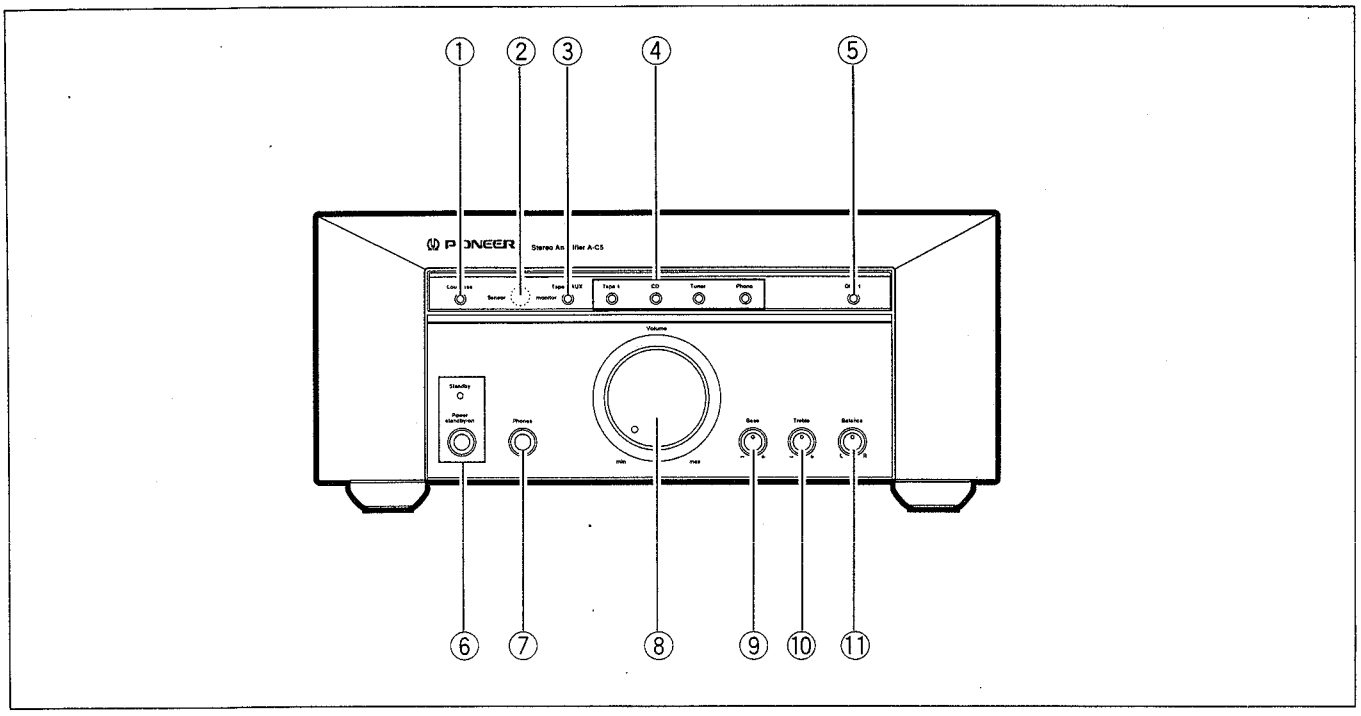

① **Loudness button**
When listening at low sound levels, press this button to boost low and high ranges, giving the overall sound a greater impact. When ON, the button indicator lamp lights. Normally, leave in the OFF position.

② **Remote control signal sensor**

③ **Tape 2/AUX monitor button**
Set to ON when playing a second tape deck or other component (DAT, etc.).

④ **Input selector buttons**
Use to select the component to be played. The indicator lamp of the selected component will light.

⑤ **Direct button**
When this button is pressed ON, sound from the selected component will be played back without being processed through the tone and balance controls. When ON, the button indicator lamp lights.

⑥ **Power switch / standby indicator**
This is the switch for electric power.
on: When set to the on position, power is supplied and the unit becomes operational.
Standby: When set to the standby position, the main power flow is cut and the unit is no longer fully operational. A minute flow of power feeds the unit to maintain operation readiness.
When the standby indicator lights, the unit is in STANDBY.

⑦ **Headphone jack**
Use to connect headphones for private listening. When headphones are connected, sound to speakers is disconnected.

⑧ **Volume control**

⑨ **Bass tone control knob**
Use to adjust the bass tone. The center position is the default position. When the knob is rotated to the right, bass frequencies are boosted, and when rotated to the left, the bass frequencies are diminished.
- This control does not operate when the direct button is ON.

⑩ **Treble tone control knob**
Use to adjust the treble tone. The center position is the default position. When the knob is rotated to the right, treble frequencies are boosted, and when rotated to the left, the treble frequencies are diminished.
- This control does not operate when the direct button is ON.

⑪ **Balance control knob**
Use to adjust the right-left speaker balance. Rotate the knob to the right to increase the sound from the right speaker while diminishing the sound from the left speaker. Rotate the knob to the left to increase the sound from the left speaker while diminishing the sound from the right speaker.
- This control does not operate when the direct button is ON.

REMOTE CONTROL UNIT OPERATION

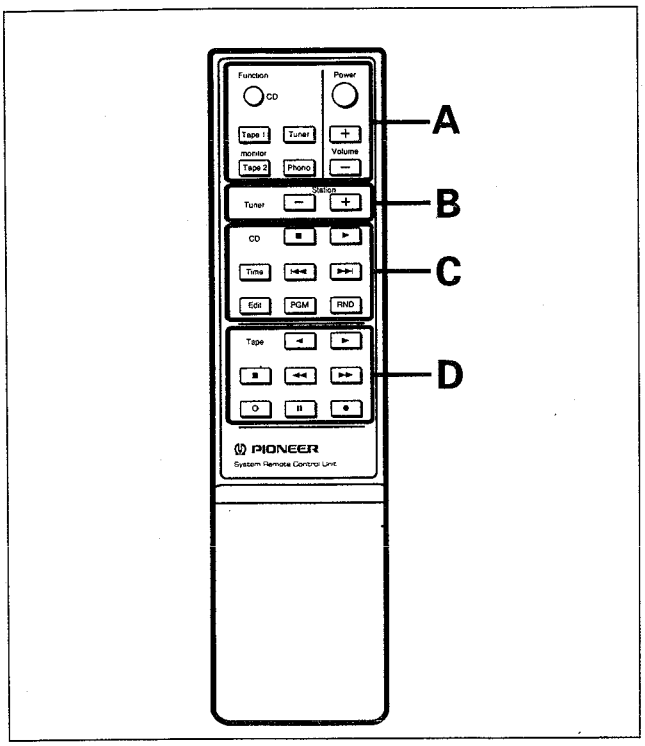

A. Amplifier operation buttons

Function buttons: Operate the same as the input selector buttons on the main unit.

Power button: Use to switch the amplifier's power between on and standby.

Volume buttons: Use to adjust the volume level.

B. Tuner (F-C5RDS/F-C3) operation buttons (U.K. model only)

Station buttons: Use to call out broadcast stations.

C. CD Player (PD-C5/PD-C3) operation buttons (U.K. model only)

Stop button: Press to stop playback.

Play button: Press to begin play.

Track search buttons:

|◀◀: When this button is pressed, play returns to the beginning of the currently playing track; when pressed repeatedly, play returns to previous tracks.

▶▶|: When this button is pressed, play advances to the beginning of the next track; when pressed repeatedly, play advances to subsequent tracks.

Time button: When this button is pressed, The CD player's display section switches as follows:

Elapsed time of currently playing track → Remaining time of currently playing track (not displayed for tracks 30 and above) ↓ Remaining time on disc (or programmed tracks); does not display during random playback ← Total time and total number of tracks on disk. ↑

- "AL" is displayed.

Program button: Use to program disc tracks in any desired order of playback.

Random button: When this button is pressed, the CD player plays back all tracks on the disc in random order. When pressed during program playback, the program is canceled and random playback begins.

Edit button: Used for auto program edit (see page 12).

D. Tape deck (T-C3) operation buttons (U.K. model only)

Playback buttons: Press to begin playback in the indicated direction.

Stop button: Press to stop tape travel.

Fast forward buttons: Press to fast forward the tape in the indicated direction. These buttons can also be used to perform music search (see tape deck's Operating Instructions).

Recording muting button: When this button is pressed, a four-second non-recorded interval is created, after which the tape deck enters the recording standby mode. When held depressed, a non-recorded interval is created for as long as the button is held depressed.

Pause button: Press to pause playback or recording. Press again to resume playback or recording.

Recording button: Press to set to the recording mode; then, press the play button to begin recording.

This unit's remote control unit can be used in one of the two following ways:

1. To operate the component itself

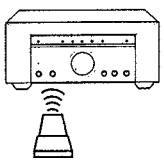

2. When this component is connected by system control cables to other Pioneer components (F-C5RDS/F-C3, T-C3, PD-C5/PD-C3), the remote control unit can be used for central system control.
(Aim the remote control unit at the amplifier's signal receiver to control all components.)

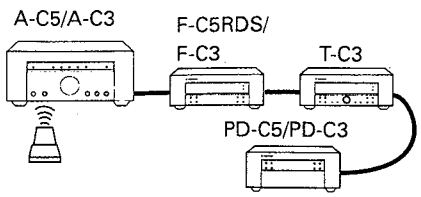

8. SPECIFICATIONS

Amplifier Section

Continuous Average Power Output is 40 watts* (A-C5) per channel, min., at 8 ohms from 20 Hertz to 20,000 Hertz with no more than 0.07 % total harmonic distortion.**

Continuous power output (DIN)
(both channels driver at 1 kHz)
A-C5 ..... 67 W + 67 W (T.H.D. 1 %, 4 Ω)
45 W + 45 W (T.H.D. 1 %, 8 Ω)
A-C3 ..... 35 W + 35 W (T.H.D. 1 %, 8 Ω)
Continuous power output **
(both channels driven, direct switch ON):
A-C5 ..... 40 W + 40 W (T.H.D. 0.07%, 20 Hz to 20 kHz, 8 Ω)
A-C3 ..... 30 W + 30 W (T.H.D. 0.07%, 20 Hz to 20 kHz, 8 Ω)
Continuous power output (RMS)
A-C5 ..... 60 W + 60 W (1 kHz, T.H.D. 10%, 8 Ω)
A-C3 ..... 45 W + 45 W (1 kHz, T.H.D. 10%, 8 Ω)
Input connectors (sensitivity/input impedance):
PHONO MM ..... 2.8 mV/47 kΩ
CD, TUNER, TAPE 1, etc. ..... 200 mV/47 kΩ
Output terminals (output level, impedance):
TAPE 1 REC, TAPE 2 AUX REC ..... 200 mV/1 kΩ
Frequency response:
PHONO (MM) ..... 20 Hz–20 kHz ± 0.3 dB
CD, TUNER, TAPE 1, etc. ..... 2 Hz–160 kHz, $^{+0}_{-3}$ dB
(Direct switch ON)
Tone controls (at –30 dB):
BASS ..... ±9 dB (100 Hz)
TREBLE ..... ±9 dB (10 kHz)
Loudness control: ..... (at –30 dB) 100 Hz/10 kHz (6 dB/4 dB)
S/N ratio (IHFA network, short circuit, Direct switch ON):
PHONO (MM) ..... 85 dB
CD, TUNER, TAPE 1, etc. ..... 105 dB
S/N ratio (DIN, continuous power/50 mW)
PHONO (MM) ..... 69 dB/68 dB
CD, TUNER, TAPE 1, etc. ..... 95 dB/73 dB

Power section, other

Power requirements:
U.S. model ..... AC 120 V, 60 Hz
U.K. model ..... AC 240 V, 50/60 Hz
Power consumption:
U.S. model ..... 130 W (A-C5)
U.K. model ..... 350 W (A-C5)
210 W(A-C3)
AC outlet ..... unswitched: 1 (100 W)
External dimensions (W x H x D):
A-C5 (U.S. model) ..... 260 x 110 x 358 mm
10-1/4 (W) x 4-5/16 (H) x 13-7/8 (D) in.
A-C5 (U.K. model) ..... 260 x 110 x 353 mm
A-C3 ..... 260 x 110 x 353 mm
Weight:
A-C5 ..... 6.3 kg (13 lb, 14 oz)
A-C3 ..... 4.9 kg

Accessories

- Operating Instructions 1
- Warranty card 1
- Remote control unit 1
- AA Batteries (R6 / UM-3) 2

* Measured pursuant to the Federal Trade Commission's Trade Regulation rule on Power Output Claims for Amplifier
** Measured with audio spectrum analyzer.

NOTE:
Specifications and design subject to possible modifications without notice due to improvements.

-756

PIONEER®
The Art of Entertainment

Service Manual

ORDER NO.
RRV1375

STEREO AMPLIFIER

A-C5
A-C3

• Refer to the service manual RRV1025 for A-C5/HEWZIW.

THIS MANUAL IS APPLICABLE TO THE FOLLOWING MODEL(S) AND TYPE(S).

Type	Model		Power Requirement	The voltage can be converted by the following method.
	A-C5	A-C3		
HEWZIW8	O	O	AC220-230V	AC240V, *
HE8	O	O	AC220-230V	AC240V, *

* : Alter the wiring of the Power-supply block at the primary winding of Power-transformer referring to the "Line Voltage Selection" described in Service Manual.

PIONEER ELECTRONIC CORPORATION 4-1, Meguro 1-Chome, Meguro-ku, Tokyo 153, Japan
PIONEER ELECTRONICS SERVICE, INC. P.O.Box 1760, Long Beach, CA 90801-1760, U.S.A.
PIONEER ELECTRONIC [EUROPE] N.V. Haven 1087, Keetberglaan 1, 9120 Melsele, Belgium
PIONEER ELECTRONICS ASIACENTRE PTE. LTD. 501 Orchard Road, #10-00 Lane Crawford Place, Singapore 0923

© PIONEER ELECTRONIC CORPORATION 1995

T-FFF JULY 1995 Printed in Japan

CONTRAST OF MISCELLANEOUS PARTS

NOTES:

- *Parts marked by "NSP" are generally unavailable because they are not in our Master Spare Parts List.*
- *The ⚠ mark found on some component parts indicates the importance of the safety factor of the part. Therefore, when replacing, be sure to use parts of identical designation.*
- *Parts marked by "◉" are not always kept in stock. Their delivery time may be longer than usual or they may be unavailable.*
- *When ordering resistors, first convert resistance values into code form as shown in the following examples.*

Ex.1 When there are 2 effective digits (any digit apart from 0), such as 560 ohm and 47k ohm (tolerance is shown by J = 5%, and K = 10%).

560Ω	→	*56 × 10¹*	→	*561*	*RD1/8PM561J*
47kΩ	→	*47 × 10³*	→	*473*	*RD1/4PS473J*
0.5Ω	→	*0R5*			*RN2H0R5K*
1Ω	→	*010*			*RS1P010K*

Ex.2 When there are 3 effective digits (such as in high precision metal film resistors).

5.62kΩ	→	*562 × 10¹*	→	*5621*	*RN1/4PC5621F*

1. CONTRAST OF A-C5/HEWZIW8 AND A-C5/HEWZIW

Although A-C5/HEWZIW8 and A-C5/HEWZIW are different in model name, they consist of the same components.

2. CONTRAST OF A-C5/HE8 AND A-C5/HE

A-C5/HE8 and A-C5/HE have the same construction except for the following:

Mark	Symbol & Description	Part No.		Remarks
		A-C5/HE	A-C5/HE8	
	AMP AF ASSY	AWK7002	AWK7003 *	
NSP	├─ HEAD PHONE ASSY	AWZ7000	AWZ7001 *	
NSP	├─ TRANS CONNECT ASSY	AWZ7299	AWZ7300 *	
	├─ AF ASSY	AWZ7007	AWZ7008 *	
	└─ SUB TRANS ASSY	AWZ7022	AWZ7023 *	
	AMP FUKUGOU ASSY	AWM7094	AWM7001 *	
	├─ VOLUME ASSY	AWZ7004	AWZ7005 *	
NSP	├─ SP OUT ASSY	AWZ7277	AWZ7019 *	
	├─ POWER AMP ASSY	AWZ7028	AWZ7029 *	
	├─ FRONT ASSY	AWZ7030	AWZ7031 *	
	└─ FUNCTION ASSY	AWZ7032	AWZ7033 *	

Note : Parts marked * are the same as those of A-C5/HEWZIW which is shown with A-C5/HEWZIW in the service manual RRV1025.

3. CONTRAST OF A-C3/HEWZIW8 AND A-C3/HEWZIW

Although A-C3/HEWZIW8 and A-C3/HEWZIW are different in model name, they consist of the same components.

4. CONTRAST OF A-C3/HE8 AND A-C3/HE

A-C3/HE8 and A-C3/HE have the same construction except for the following:

Mark	Symbol & Description	Part No.		Remarks
		A-C3/HE	A-C3/HE8	
	AMP AF ASSY	AWK7024	AWK7025 *	
NSP	├─ HEAD PHONE ASSY	AWZ7181	AWZ7010 *	
NSP	├─ TRANS CONNECT ASSY	AWZ7011	AWZ7003 *	
	├─ AF ASSY	AWZ7015	AWZ7016 *	
	└─ SUB TRANS ASSY	AWZ7022	AWZ7023 *	
	AMP FUKUGOU ASSY	AWM7002	AWM7003 *	
	├─ VOLUME ASSY	AWZ7012	AWZ7013 *	
NSP	├─ SP OUT ASSY	AWZ7193	AWZ7034 *	
	├─ POWER AMP ASSY	AWZ7035	AWZ7036 *	
	├─ FRONT ASSY	AWZ7037	AWZ7038 *	
	└─ FUNCTION ASSY	AWZ7032	AWZ7039 *	

Note : Parts marked * are the same as those of A-C3/HEWZIW which is shown with A-C3/HEWZIW in the service manual RRV1025.

-756

PIONEER®
The Art of Entertainment

Service Manual

ORDER NO.
RRV1375

STEREO AMPLIFIER

A-C5
A-C3

• Refer to the service manual RRV1025 for A-C5/HEWZIW.

THIS MANUAL IS APPLICABLE TO THE FOLLOWING MODEL(S) AND TYPE(S).

Type	Model		Power Requirement	The voltage can be converted by the following method.
	A-C5	A-C3		
HEWZIW8	O	O	AC220-230V	AC240V, *
HE8	O	O	AC220-230V	AC240V, *

* : Alter the wiring of the Power-supply block at the primary winding of Power-transformer referring to the "Line Voltage Selection" described in Service Manual.

PIONEER ELECTRONIC CORPORATION 4-1, Meguro 1-Chome, Meguro-ku, Tokyo 153, Japan
PIONEER ELECTRONICS SERVICE, INC. P.O.Box 1760, Long Beach, CA 90801-1760, U.S.A.
PIONEER ELECTRONIC [EUROPE] N.V. Haven 1087, Keetberglaan 1, 9120 Melsele, Belgium
PIONEER ELECTRONICS ASIACENTRE PTE. LTD. 501 Orchard Road, #10-00 Lane Crawford Place, Singapore 0923

© PIONEER ELECTRONIC CORPORATION 1995

T-FFF JULY 1995 Printed in Japan

CONTRAST OF MISCELLANEOUS PARTS

NOTES:

- *Parts marked by "NSP" are generally unavailable because they are not in our Master Spare Parts List.*
- *The ⚠ mark found on some component parts indicates the importance of the safety factor of the part. Therefore, when replacing, be sure to use parts of identical designation.*
- *Parts marked by "◉" are not always kept in stock. Their delivery time may be longer than usual or they may be unavailable.*
- *When ordering resistors, first convert resistance values into code form as shown in the following examples.*

Ex.1 When there are 2 effective digits (any digit apart from 0), such as 560 ohm and 47k ohm (tolerance is shown by J = 5%, and K = 10%).

560Ω	→	56×10^1	→	561	RD1/8PM[5][6][1]J
47kΩ	→	47×10^3	→	473	RD1/4PS[4][7][3]J
0.5Ω	→	0R5			RN2H[0][R][5]K
1Ω	→	010			RS1P[0][1][0]K

Ex.2 When there are 3 effective digits (such as in high precision metal film resistors).

5.62kΩ	→	562×10^1	→	5621	RN1/4PC[5][6][2][1]F

1. CONTRAST OF A-C5/HEWZIW8 AND A-C5/HEWZIW

Although A-C5/HEWZIW8 and A-C5/HEWZIW are different in model name, they consist of the same components.

2. CONTRAST OF A-C5/HE8 AND A-C5/HE

A-C5/HE8 and A-C5/HE have the same construction except for the following:

Mark	Symbol & Description	Part No.		Remarks
		A-C5/HE	A-C5/HE8	
	AMP AF ASSY	AWK7002	AWK7003 *	
NSP	├─ HEAD PHONE ASSY	AWZ7000	AWZ7001 *	
NSP	├─ TRANS CONNECT ASSY	AWZ7299	AWZ7300 *	
	├─ AF ASSY	AWZ7007	AWZ7008 *	
	└─ SUB TRANS ASSY	AWZ7022	AWZ7023 *	
	AMP FUKUGOU ASSY	AWM7094	AWM7001 *	
	├─ VOLUME ASSY	AWZ7004	AWZ7005 *	
NSP	├─ SP OUT ASSY	AWZ7277	AWZ7019 *	
	├─ POWER AMP ASSY	AWZ7028	AWZ7029 *	
	├─ FRONT ASSY	AWZ7030	AWZ7031 *	
	└─ FUNCTION ASSY	AWZ7032	AWZ7033 *	

Note : Parts marked * are the same as those of A-C5/HEWZIW which is shown with A-C5/HEWZIW in the service manual RRV1025.

3. CONTRAST OF A-C3/HEWZIW8 AND A-C3/HEWZIW

Although A-C3/HEWZIW8 and A-C3/HEWZIW are different in model name, they consist of the same components.

4. CONTRAST OF A-C3/HE8 AND A-C3/HE

A-C3/HE8 and A-C3/HE have the same construction except for the following:

Mark	Symbol & Description	Part No.		Remarks
		A-C3/HE	A-C3/HE8	
	AMP AF ASSY	AWK7024	AWK7025 *	
NSP	├─ HEAD PHONE ASSY	AWZ7181	AWZ7010 *	
NSP	├─ TRANS CONNECT ASSY	AWZ7011	AWZ7003 *	
	├─ AF ASSY	AWZ7015	AWZ7016 *	
	└─ SUB TRANS ASSY	AWZ7022	AWZ7023 *	
	AMP FUKUGOU ASSY	AWM7002	AWM7003 *	
	├─ VOLUME ASSY	AWZ7012	AWZ7013 *	
NSP	├─ SP OUT ASSY	AWZ7193	AWZ7034 *	
	├─ POWER AMP ASSY	AWZ7035	AWZ7036 *	
	├─ FRONT ASSY	AWZ7037	AWZ7038 *	
	└─ FUNCTION ASSY	AWZ7032	AWZ7039 *	

Note : Parts marked * are the same as those of A-C3/HEWZIW which is shown with A-C3/HEWZIW in the service manual RRV1025.

P.S

1. Sub trans assy (AWZ7023) is made a design change like the following:

Mark	Description	OLD	NEW
⚠	C1001, C1002	ACG1002 (0.01μF/400V)	ACG7020 (0.01μF/250V)

2. Function assy (AWZ7033, AWZ7039) is made a design change like the following:

Mark	Description	OLD	NEW
	C2137 – C2139 C2136	CCSQCH101J50 Not used	Not used CKCYF473Z50